aalberts integrated piping systems

VSH Super

EN technical manual

contents

Aalberts integrated piping systems 4

VSH Super 8

technical data 11

applications 12
fittings 14
tubes 17
installation guidelines 19
built-in 23
general installation information 26
corrosion 35
warranty 39

product range 41

VSH Super compression fittings 41
VSH Super Multi Super & MPI 69
VSH Super Gas Belgium 75
VSH Super valves 81

Aalberts integrated piping systems

don’t just buy products, buy solutions.

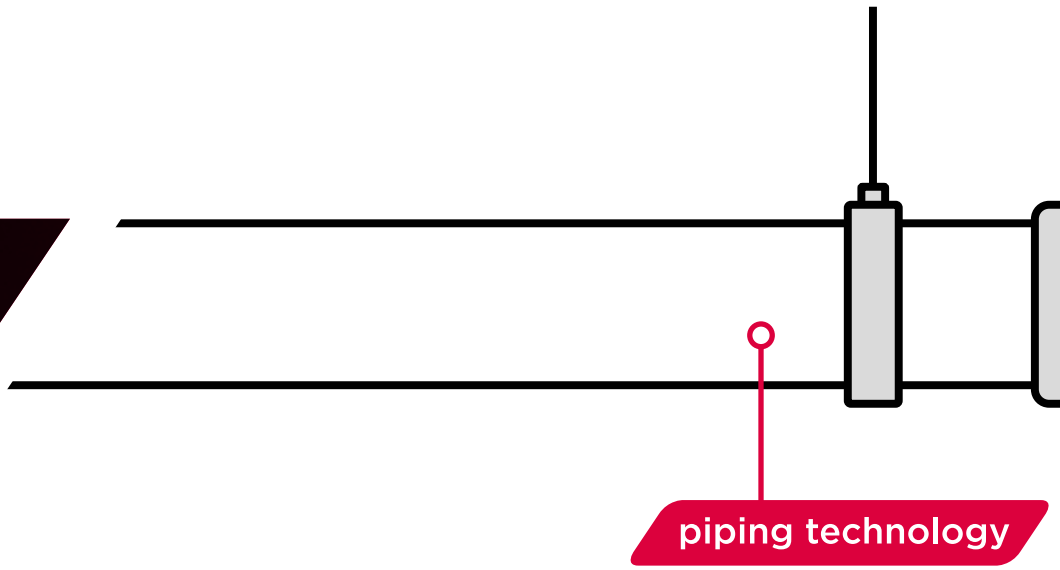

we are Aalberts integrated piping systems

Aalberts integrated piping systems engineers the most advanced integrated piping systems for the distribution and control of liquids and gases for key verticals, like industrial, utilities, commercial and residential. We offer fully integrated piping systems in valve, connection, fastening and piping technology. We work hand-in-hand with our customers to create the perfect integrated piping system, that meets their requirements. Our piping systems are easy to specify, install, control and maintain, saving important preparation and installation time. We meet the highest quality and industry standards needed in the selected verticals. We are the only business that truly offers its customers a single sourced and complete integrated piping solution, each and every time.
Don't just buy products, buy solutions.

our mission

With our integrated piping systems, supported by our unique Digital Design Service, we ensure that you will always get the best and easiest solution for the installation of an integrated piping system. From the moment that your plan is designed, you can get advice on complete and tailored solutions.
With our Revit Plug-in you have digital access to the complete product offering within Aalberts integrated piping systems. This information is always accessible and up to date, allowing the design of an optimal and economically attractive installation that will meet all your demands. So whether the task is project conception, installation, or on-going maintenance, we are the company that truly delivers a complete system and service offering. Our know-how, our can-do attitude, and our relentless innovation come as standard. We will sweat the small stuff in our quest to find the perfect solutions, even if we have to invent them.
This is how we deliver excellence.

our way of working

We operate from various regions around the globe: America, EMEA and APAC. As we have multiple locations in many countries, we are always close to our customers. More than 3500 mission critical employees are persistent to offer the best integrated piping system. We work on our products, solutions and services every day. No matter how big the opportunity is, when we say we've got this, we won't let go until there is nothing left to learn. We improve ourselves by exchanging knowledge and experience to stay ahead of our competitors.
Good is never good enough.

With our sustainable spirit we contribute to circularity every single day. This belief is strongly linked to the way we do business. Rethink, reduce and recycle. We are entrepreneurial and take ownership in everything we do. We are convinced that self-development and diversity is essential.
The Aalberts way, winning with people.

the strength of Aalberts integrated piping systems

- the perfect solution for every project
- smart, fast and efficient installation
- valuable advice from the drawing board to delivery
- a very wide product range

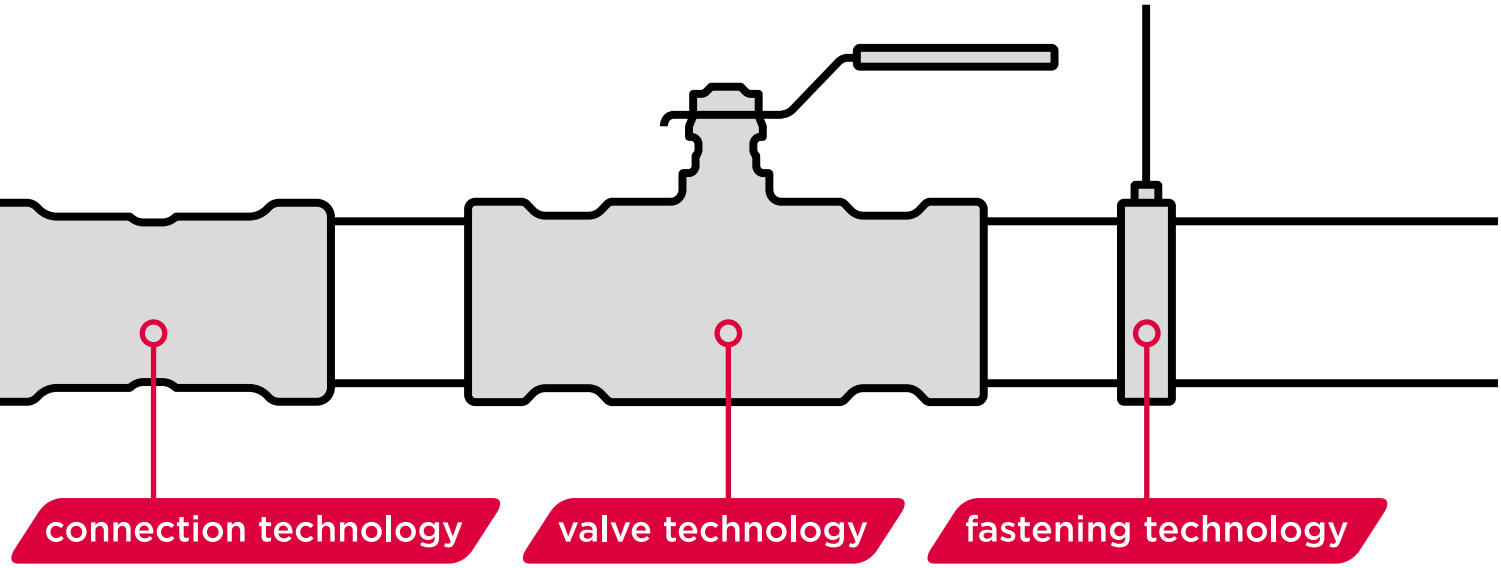

For more information about Aalberts integrated piping systems, go to www.aalberts-ips.eu

Aalberts integrated piping systems connect: our systems are easy to combine with each other

Aalberts integrated piping systems is the combination of different companies with a strong legacy in their markets. The individual brands are well-known and each represents a long history. Together they offer the best integrated piping system for now and in the future.

our product lines

We offer product ranges that:

- connect seamlessly
- are available in dimensions from 6 mm up to 104" (DN2600)
- can be used for thick-walled pipe and thin-walled metal or plastic tube
- have press, compression, groove and push connections
- can be expanded with valves and accessories
- are BIM ready

Connection technology

VSH

VSH has been supplying quality products for 90 years and delivers piping systems and fittings throughout the world. In the 1970's VSH brought the well-known VSH Super compression fitting on the market which is still a best-seller, followed by the VSH XPress pressfitting, a technology that makes it possible to realize a connection even faster and more reliable.

Shurjoint

The history of Shurjoint dates back to 1974, when the founders produced their first grooved couplings. These first couplings were produced from malleable iron, the casting material of choice at this time. Shurjoint is recognized as a world leader in the design and manufacture of mechanical piping components.

Valve technology

Apollo

Apollo Valves has been supplying the commercial and industrial valve markets since 1928. The valves, with their signature yellow handles, are designed and manufactured in their state-of-the-art facilities in the Carolinas, USA. Apollo's vertical manufacturing integration assures better quality control, better cost control, and the shortest delivery lead times possible for their range of ball valves, automation products, safety relief valves, backflow preventers and plumbing/heating products.

VSH PowerPress®

material	carbon steel
suitable for	thick-walled steel
connection	press / DW-profile
dimensions	½" - 2" (DN15 – DN50)

VSH SudoPress

material	carbon steel / stainless steel / copper
suitable for	carbon steel / stainless steel / copper
connection	press / V-profile
dimensions	12 – 108 mm (DN10 – DN100)

VSH XPress

material	carbon steel / stainless steel / copper / cunifer
suitable for	carbon steel / stainless steel / copper / cunifer
connection	press / M-profile
dimensions	12 – 108 mm (DN10 – DN100)

VSH Shurjoint

material	ductile iron / stainless steel
suitable for	thick-walled steel / stainless steel / HDPE
connection	groove
dimensions	½" - 104" (DN15 – DN2600)

VSH Super

material	brass
suitable for	carbon steel / stainless steel / copper / plastic
connection	compression
dimensions	6 – 54 mm (DN4 – DN50)

VSH SmartPress

material	stainless steel
suitable for	stainless steel (schedule 5S/10S)
connection	press / V-profile (ASP)
dimensions	½" - 2" (DN15 – DN50)

Apollo Valves

material	brass / bronze / carbon steel / stainless steel
suitable for	steel / carbon steel / stainless steel / copper
connection	threaded / press / push / flange
dimensions	DN15 – DN300

Apollo ProFlow

material	brass / ductile iron
suitable for	carbon steel / stainless steel / copper / plastic
connection	threaded / press / flange
dimensions	DN15 – DN300

Seppelfricke

material	brass
suitable for	steel / carbon steel / stainless steel / copper
connection	press (V & M profile) / threaded
dimensions	10 – 54 mm (DN8 – DN50)

VSH MultiPress

material	PPSU / brass
suitable for	plastic
connection	press / U & TH profile
dimensions	14 – 63 mm (DN10 – DN50)

VSH UltraLine

material	PPSU / brass / PVDF
suitable for	plastic
connection	sliding sleeve
dimensions	14 – 32 mm (DN10 – DN25)

VSH Tectite

material	copper / brass / stainless steel
suitable for	copper / carbon steel / stainless steel
connection	push
dimensions	10 – 54 mm (DN8 – DN50)

VSH Super

VSH Super is a complete range of fittings and valves suitable for a very wide variety of applications, ranging from potable water, gas, heating and solar to compressed air systems. The VSH Super range includes compression fittings for connection to copper and steel tubes. VSH Super also has compression fittings that are suitable for connecting plastic tube. Convenient installation and high quality are the top priorities.

the benefits of VSH Super

- a wide selection of fittings for every application (metal and plastic tubes)
- normal brass and DZR fittings from 6 to 54 mm
- available in plain brass, nickel-plated and chrome-plated variants
- a wide range of valves and accessories provided with VSH Super compression connections
- designed for optimum installation convenience thanks to the wide spanner flats on the union nuts and housings
- simple installation with standard tools
- quick connection technology allowing reassembly
- smooth assembly with additional tube guide
- peace of mind: maximum quality and security
- a wide range of approvals available, including Kiwa, DVGW and Gastec QA

Aalberts integrated piping systems is associated with compression fittings with the introduction of VSH Super on the Dutch market in 1975. In addition to the standard compression fitting which is suitable for copper or thin-walled steel tubes, VSH Super also offers special solutions, including:

- **VSH Multi Super** and **VSH Super MPI sets:** for plastic and multilayer tubes
- **VSH Super Blue:** specifically for connecting thick-walled steel tubes
- **VSH Super Gas Belgium:** this range of fittings complies with the guidelines for gas installations in Belgium

A wide variety of valves and accessories with compression fittings complete the VSH Super range. These include solutions such as water ball valves and gas ball valves.

designed for optimum installation convenience

VSH Super compression fittings are designed on the basis of fitters' requirements and thus offer optimum installation convenience. The results of this include, for example, the dimensionally wide and stable spanner flats, ensuring that the spanner always remains in place during tightening. The special compression ring ensures an optimum seal at all times. This delivers a huge saving in terms of manpower costs as there is no need to make return visits for retightening. What's more, the high-quality finish of the fittings ensures a smooth assembly at all times.

quality and availability

All VSH Super compression fittings are produced in our modern, automated factory in Hilversum, the Netherlands. Delivering absolute top quality is our main focus, so we maintain strict quality control in the production process. The complete VSH Super product range is available from our reliable network of expert, service-oriented wholesalers.

safety

The years of experience in installation of VSH Super compression fittings in combination with a wide range of national and international approvals and the product guarantee ensure a reliable and safe product.

VSH Super

technical data

applications

potable water installations

VSH Super compression fittings with a copper tube, soft (R220) semi-hard (R250) and hard (R290) with dimensions in accordance with EN 1057, wall thickness in accordance with KIWA BRL-K639/03, in which the requirements of NEN-EN 1254-2 are included. Stainless steel tube according to EN 10312, DVGW Worksheet W 541.

operating temperature:	90°C
max. temperature:	120°C (short term)
max. operating pressure:	10 bar

VSH Multi Super compression with a plastic or multilayer tube approved by Aalberts integrated piping systems for this application.

operating temperature:	70°C
max. temperature:	95°C (short term)
max. operating pressure:	10 bar

MPI sets with a plastic or multilayer tube approved by Aalberts integrated piping systems in accordance with potable water certification (RISE/ETA).

heating installations

VSH Super compression fittings with a copper tube R220/R250/R290 with dimensions according to EN 1057. Thin-walled carbon steel tube according to EN 10305-3. Thick-walled steel tube in accordance with EN 10255 (in combination with a Super Blue compression ring). Stainless steel tube according to EN 10312, DVGW Worksheet W 541.

operating temperature:	90°C
max. temperature:	120°C (short term)
max. operating pressure:	10 bar

VSH Multi Super compression with a plastic and multilayer tube approved for this application by Aalberts integrated piping systems in accordance with the applicable class (operating conditions in accordance with ISO 10508), see table hereafter.

Temperature range in accordance with EN ISO 10508 class 4 or 5. Maximum operating pressure VSH MultiPress, VSH Multicon and Henco: 10 bar. (see table hereafter).

For underfloor heating the temperature range is in accordance with ISO 10508 class 4. Maximum operating pressure VSH MultiPress, VSH Multicon and Henco: 10 bar continuous (see table hereafter).

note

for applications using other approved multilayer or PEX tubes, check the tube specifications

application class (EN ISO 10508)	T_d		T_{max}		T_{mal}		characteristics intended use
	°C	time/ years	°C	time/ years	°C	time/ hours	
1[a]	60	49	80	1	95	100	hot water supply (60°C)
2[a]	70	49	80	1	95	100	hot water supply (70°C)
4[b]	20 40 60	2.5 20 25	70	2.5	100	100	underfloor heating and low temperature radiators
5[b]	20 60 80	14 25 10	90	1	100	100	high temperature radiators

note: where values for T_d, T_{max} and T_{mal} are higher than in the table above, this international standard does not apply,

[a] one country can select from the class or classes in accordance with their national legislation.
[b] whenever a temperature higher than the design temperature occurs for any class, then the times must be aggregated. 'Cumulatively' in the table implies a temperature profile for the temperature mentioned over a specific period. (For example, a design temperature for 50 years for Class 5 is 20°C for 14 years, followed by 60°C for 25 years, 80°C for 10 years, 90°C for 1 year and 100°C for 100 hours,)

gas installations

VSH Super compression fittings with an R250 copper tube in accordance with EN 1057 depending on the gas approval type. For Belgium there are special VSH Super compression fittings with a different compression ring (with a stop end) and a raised nut that, in addition to Gastec QA KE 35 also satisfies the Belgian gas approval KVBG/ARGB (maximum pressure 0.1 bar).
Suitable for gas installations in accordance with the DVGW-Worksheet G260/I in the second and third gas family (for example methane, butane, propane) in accordance with DIN 3387 and DVGW-TRGI G 600.

operating temperature:	- 20°C to 60°C
max. operating pressure:	1 bar

compressed air installations

VSH Super compression fittings in combination with a carbon steel tube in accordance with EN 10305-3 or a stainless steel tube in accordance with EN 10312 or a copper tube in accordance with EN 1057.
A carbon steel precision tube can be used with a maximum water volume of 880 mg/m³, class 3 ISO 8573 part 1. If the maximum water content is exceeded, copper or stainless steel must be used,

operating temperature:	-20°C to 30°C
max. operating pressure	10 bar

steam installations

VSH Super compression fittings in combination with a stainless steel tube in accordance with EN 10312 or a copper tube (R250/R290) in accordance with EN 1057.

operating temperature:	0°C to 175°C
max. temperature:	200°C (short term)
max. operating pressure:	9 bar

vacuum installations

VSH Super compression fittings can be fitted with a vacuum pressure up to -0.8 bar (relative) in combination with a copper tube in accordance with EN 1057, a carbon steel precision tube in accordance with EN 10305-3 or a stainless steel tube conforming to EN 10312.

solar installations

VSH Super compression fittings in combination with a stainless steel tube in accordance with EN 10312 or a copper tube (R250/R290) in accordance with EN 1057. The formation of condensation on the fittings must be prevented.

operating temperature:	-20°C to 180°C
max. temperature:	200°C (short term)
max. operating pressure:	9 bar

fittings

VSH Super compression fittings

The compression ring lies closed up between two tapered bores; one in the housing and one in the union nut (see situation **1**). The tapered bore of the housing is smaller than that of the union nut. The effect of this construction is that when the fitting is tightened, the compression ring first begins to deform in the housing and only afterwards in the union nut. In this way the rotating of the tube during installation is prevented. A compression connection in the installed position is shown in situation **2**. After proper tightening of the union nut, a tight connection is made.

1. situation before tightening

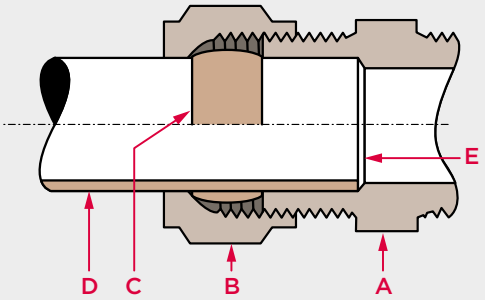

2. situation after tightening

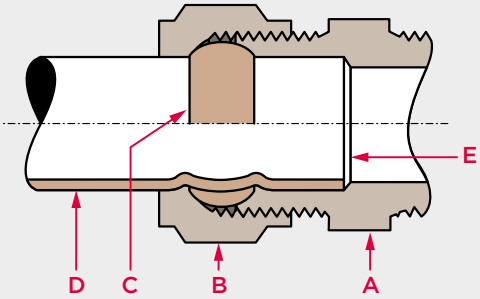

A = *housing*
B = *union nut*
C = *compression ring.*
D = *tube*
E = *stop end*

material and screw threads

standard brass

VSH Super compression fittings are manufactured as standard from first-class, low-lead brass: CW617N (CuZn40Pb2). The threads of the compression fittings are manufactured in accordance with ISO 228-1. The internal thread and tapered external thread conform to ISO 7-1. All type G fittings are manufactured in accordance with the Belgian gas standard (KBVG/ARGB) NBN-D51.003. These fittings are fitted with a compression ring with a stop end and a raised union nut.

dezincification resistant brass

The VSH Super DZR (dezincification resistant) compression fittings, compression rings and one piece reducers conform to the European standard EN 1254-2 (1998) for compression fittings. A thickened edge is fitted to the female thread, which lends extra strength to the fitting. Dezincification resistant brass CW602N (CuZn36Pb2As) is used as the raw material for these fittings in accordance with EN 12164 and EN 12165 (1998). The symbol CR is placed on these fittings, which indicates that the fittings are dezincification resistant.

thread

The fittings with female thread have a thread (Rp) according to ISO 7-1 or cylindrical screw threads (G) in accordance with ISO 228-1.

The fittings are provided with an external thread of tapered screw threads (R) conforming to ISO 7-1 or cylindrical threads (G) conforming to ISO 228. The male threads are provided with a serration to make sure that the rotation of tape or hemp is prevented when installing.

VSH Multi Super compression fittings

Taking into account the difference in the machinability with different tube sizes, two different designs are available.

VSH Multi Super for 14 and 16 mm plastic tubes

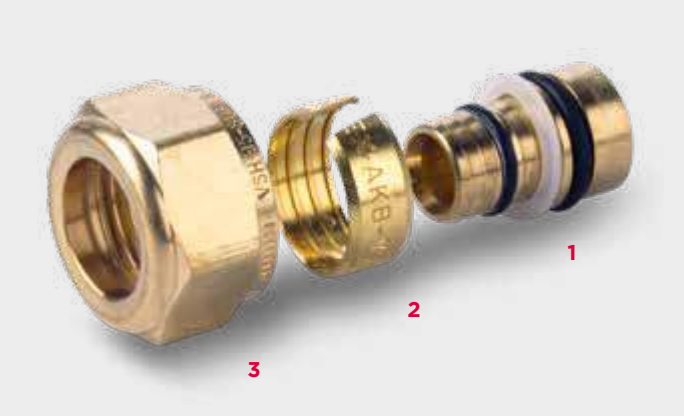

1. the insert has a cylindrical shape and must be positioned against the stop in the housing to guarantee perfect sealing by the o-ring. The insert is also fitted with a white plastic ring which avoids corrosion by preventing contact between the brass and aluminium in the multilayer tube. The front end o-ring acts as shielding in the tube to meet the tolerances in the inner diameter

2. the compression ring has a saw cut, allowing the outer diameter tolerances between different plastic tubes to be met. The compression ring is also fitted with grooves on the inside, ensuring the compression ring grips the tube perfectly

3. the union nut is similar to those present in the VSH Super compression fittings, with the only difference being the internal diameter on the front side. This is made to suit a plastic tube of 14 and 16 mm. The size is printed on the nut.

VSH Multi Super for a plastic tube Sizes 20, 25 and 26 mm

1. the insert has a tapered shape and must be positioned against the oblique stop in the housing in such way that the o-ring is pressed against the housing to guarantee a perfect sealing by the o-ring. The insert is also fitted with a white plastic ring which avoids corrosion by preventing contact between the brass and aluminium in the multilayer tube. The o-ring on the front end acts as shielding in the tube to meet the tolerances in the inner diameter

2. the compression ring has a saw cut, allowing the outer diameter tolerances between different plastic tubes to be met. The compression ring is also fitted with grooves on the inside, ensuring the compression ring grips the tube perfectly

3. the union nut is extended. The internal diameter at the front side is made to suit a plastic tube in sizes 20, 25 and 26 mm

materials and threads

The VSH Multi Super compression fittings are manufactured as standard from first-class, low-lead brass CW617N (CuZn40Pb2). The screw threads of the VSH Multi Super compression fittings are manufactured in accordance with ISO 228. The internal thread and tapered external thread conform to ISO 7. The o-rings are manufactured from EPDM material and have a maximum service temperature up to 135°C.

VSH Super Blue plastic compression rings

VSH Super compression fittings can also be fitted to a thick-walled steel tube in accordance with EN 10255. In that case, the brass compression ring must be replaced with a plastic VSH Super Blue compression ring. VSH Super Blue compression rings must only be used in heating systems. They are not suitable for gas or potable water connections.

The VSH Super compression fitting with a VSH Super Blue compression ring enables new radiators to be installed onto existing thick-walled connections with the following advantages:

- no need to thread the tubes
- no welding needed
- can be placed in recesses, saving space
- nickel-plated fittings available

It is possible to use it in combination with other tube materials, but only with the written approval of Aalberts integrated piping systems. The pressure and temperature range 20°C till 95°C appear in the table below.

			max. pressure		temperature	
article no.	dimension	com-pression size [mm]	at 20°C [bar]	at 95°C [bar]	operating range [°C]	peak [°C]
0858495	⅜" (DN10)	18	15	8	20 - 95	120
6320534	⅜" (DN10)	22	15	8	20 - 95	120
0858539	½" (DN15)	22	15	8	20 - 95	120
0858541	¾" (DN20)	28	15	6	20 - 95	120
0858550	1" (DN25)	35	10	4	20 - 95	120

approvals

VSH Super

VSH Super compression fittings are certified by a large number of European authorities. Relevant approvals are available on the website under the product range overview. The certificates are available on request.

country	approval	medium	tube
Netherlands	Kiwa	water	Cu 10-54 mm
Netherlands	Gastec	gas	Cu 10-54 mm
Germany	DVGW	water	Cu/stainless steel 12-35 mm
Germany	DVGW	gas	Cu 12-22 mm
Belgium	KVBG/ARGB	gas	Cu 12-28 mm
Sweden	RISE	water	Cu 10-54 mm PEX 10-22 mm
Norway	SINTEF	water	Cu 8-54 mm
Denmark	ETA	water	Cu 10-54 mm stainless steel 15-35 mm PEX 10-22 mm

VSH Multi Super

If VSH Multi Super compression fittings are fitted in combination with tubes from other brands, Kiwa approval may not be granted, as a system approval applies. Aalberts integrated piping systems has tested all of the approved combinations with other tube brands under very heavy conditions (on the basis of Kiwa requirements, including a thermal cycling test of 5,000 cycles) and therefore guarantees a perfect seal in water and heating applications.

brand	tube type	dimensions 14-16	dimensions 20-25-26
VSH MultiPress/ KAN-therm Multi Universal	PE-RT/Al/PE-HD	X	X
Comap MultiSkin	PE-Xc/Al/PE-X	X	X
Comap Techtub	PE-Xc/EVOH	X	X
Henco	PE-Xc/Al/PE-Xc	X	X
Alpex Therm	multilayer	X	-
Alphacan	PEX	X	-
Becker Plastics	PEX	X	-
Begetube	multilayer	X	-
Espace	PEX	X	-
Fränkische Alpex Duo XS	multilayer	X	X
Gabotherm	PB	X	-
Georg Fischer – iFit	multilayer	X	X
Giacomini	multilayer	X	-
HAKA	PE-Xc/Al/PE-Xc	X	X
Hewing-Proaqua	PE-Xc/Al/PE-X	X	-
Pexep Alupex	multilayer	X	-
Pexep Pex	PEX	X	-
Polytherm	multilayer	X	-
Polytherm MT	multilayer	X	-
Superpipe	multilayer	X	-
Uponor/Unipipe	PE-RT/Al/PE-RT	X	-
Velta	PEX	X	-
Velta Rapex	multilayer	X	-
KAN-therm	PE-Xc/EVOH	X	X
KAN-therm	PE-RT/EVOH	X	-
Wavin Tigris	PE-Xc/Al/PE-HD	X	X

multilayer tube availbilty

VSH Super MPI sets

The VSH Super MPI sets are especially introduced for the Scandinavian market and provided with a range of potable water approvals in combination with specific PEX and multilayer tubes listed in the table below. Certificates for these product ranges are also available on request.

country	approval	medium	tube material
Denmark	ETA	water	multilayer 15-20 mm PEX 15-22 mm
Sweden	RISE	water	multilayer 16-20 mm PEX 15-22 mm

tubes

VSH Super compression fittings, VSH Multi Super fittings, inserts and the VSH Super MPI inserts can be combined with a range of different tube materials.

copper tube

VSH Super compression fittings are designed to be fitted to a copper tube according to EN 1057, soft (R220), semi-hard (R250) and hard (R290). With a soft copper tube (R220), use a copper insert stiffener (type S1283).

technical characteristics of approved copper tube

material	DHP copper article No. CW024A in accordance with DIN EN 1412
external tolerance Ø	EN 1057
tensile strength	R220 - soft - 220 N/mm² (not for GAS) R250 - medium-hard - 250 N/mm² R290 - hard - 290 N/mm²
smallest bend radius	3.5 x the external diameter of the tube (to -10°C)

released wall thickness per outside diameter

outside Ø [mm]	copper tubes in accordance with EN 1057		
	R220	R250	R290
8	0.8-1.0	0.8-1.0	-
10	0.8-1.0	1.0	-
12	1.0	1.0	-
15	1.0	1.0	1.0
18	1.0	1.0	1.0
22	1.0-1.1	1.0-1.1	1.0-1.1
28	1.2	1.2	1.0-1.5
35	-	1.2-1.5	1.0-1.5
42	-	1.2-1.5	1.0-1.5
54	-	1.2-1.5	1.0-2.0

applications

- potable water in accordance with a range of national (Kiwa) and international (DVGW, ETA, RISE, SINTEF) approvals and guidelines (including EU Directive 98/83/EC)
- heating installations
- district heating
- solar installations
- compressed air installations
- gas installations
- fuel oil installations

carbon steel tube

carbon steel precision tube, seamless or welded in accordance with EN 10305-3 (previously DIN 2394). When using a connection made in accordance with the assembly specifications, the compression fittings and zinc coating have no adverse effect on each other.
The VSH SudoXPress Carbon tube, material 1.0034, RSt 34-2 conforming to EN 10305-3, is also ideal in combination with VSH Super compression fittings.

applications

- heating installations (closed-loop systems)
- compressed air installations
- solar installations (closed-loop systems)

carbon steel thick-walled tube

It is possible to connect a thick-walled steel tube that conforms to the EN 10255 standard with a VSH Super compression fitting. The brass compression ring must then be replaced with a blue plastic compression ring (S1282), called VSH Super Blue.

application

- heating installations

stainless steel tube

VSH Compression fittings can be combined with stainless steel tubes according EN 10312 table 2 or DVGW worksheet GW541. Our VSH SudoXPress Stainless Steel tubes also complies with these standards.

applications

- potable water installations
- heating installations
- compressed air installations (dry or oil containing)
- solar installations

The permitted plastic multilayer tubes are listed in the table on page 16. If you wish to use fittings with different tube materials than those described below, a written permission of Aalberts integrated piping systems is required.

plastic multilayer tube

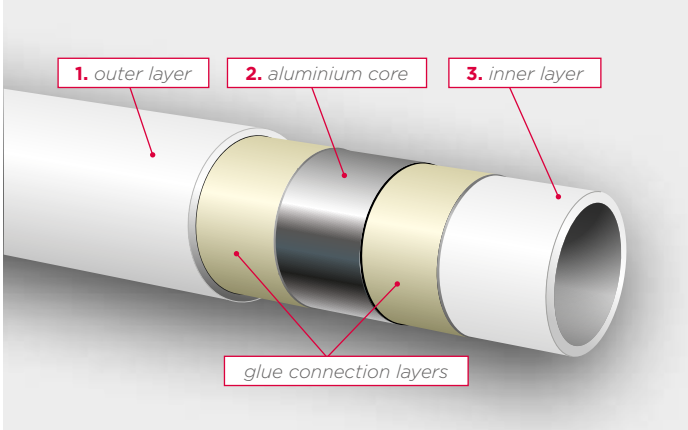

construction of multilayer tube

Multilayer tubes are plastic tubes with an aluminium core. For example, VSH MultiPress tubes consist of an outer layer made of PE-HD (**1**), a butt-welded aluminium layer (**2**) is fastened to the inner and outer layers with a special glue layer. The inner layer is made of PE-RT, type 2 (**3**) and have an increased temperature resistance (conforming to DIN 16833). VSH MultiPress tubes have a diffusion barrier thanks to the fully sealed aluminium layer.

connection combinations

It is possible to connect PEX tube with an external tube diameter, which is the same as for copper tube (10 to 22 mm), in which case a brass support sleeve (S1285) must be used.
In addition, there are VSH Multi Super inserts and fittings which are approved for a wide range of multilayer tubes and PEX tubes, which increase flexibility during installation. Aalberts integrated piping systems can provide the following multilayer tubes, which are suitable for use in combination with the VSH Multi Super inserts and fittings.

applications

- potable water installations
- heating installations
- underfloor heating

characteristics VSH MultiPress tube

outside Ø [mm]	**14**	**16**	**20**	**25**
wall thickness [mm]	2.0	2.0	2.0	2.5
internal Ø [mm]	10	12	16	20
minimum bend radius, manual (5 x d) [mm]	70	80	100	125
weight [g/m]	88	102	175	274
water capacity [l/m]	0.079	0.113	0.201	0.314
linear expansion coefficient [mm/(mK)]	0.025	0.025	0.025	0.025
heat conductivity coefficient [W/mK]	0.43	0.43	0.50	0.50
max. operating pressure, long term [bar]	10	10	10	10
max. operating temperature, continuous [°C]	70	70	70	70
application class (EN ISO 21003-1)	2-4-5	2-4-5	2-4-5	2-4-5
oxygen diffusion [mg/l)	0	0	0	0
wall roughness [mm)	0.007	0.007	0.007	0.007

installation guidelines

Installation of VSH Super compression fittings

Only use tubes with the same nominal diameter as the dimension given on the union nuts. Installation of compression fittings must be carried out as shown below.

1. cut the tube to length

Cut the tube to the correct length with a tube cutter, fine tooth hand saw or machine saw, suitable for the tube material.

2. deburring the tube

Deburr in- and outside and check the tube end for scratches, dirt and deformations.

3. tube and fitting assembly

Check that compression ring is in the correct position in the fitting. Place the tube in the fitting **until the tube stop**. The ring must be positioned on the tube as shown in the figure on page 14 (situation before tightening).

4. tighten union nut

Tighten the union nut by hand and then tighten further by the number of turns given in the table hereafter.

prescribed number of tightening turns

tube type	6 up to 12 mm	15 up to 22 mm	28 mm	35 mm	42 mm	54 mm
copper	1	¾	¾	¾	¾	¾
thin-walled steel	1	¾	¾	¾	-	-
chromed copper	¾	1¼	-	-	-	-
stainless steel	1	¾	¾	¾	-	-
plastic (PEX with insert)	1¼	1¼	-	-	-	-

	tube Ø	compression	number of tightening turns
thick-walled steel tube (with Super Blue plastic compression ring)	⅜"	18 mm	1*
	⅜"	22 mm	1*
	½"	22 mm	1*
	¾ "	28 mm	1*
	1 "	35 mm	1*

* When using a compression ring for a thick-walled tube, tighten the union nut after the first heating cycle by at least half a turn.

Note: installation of compression fittings must only be carried out with an correct sized wrench or a well-set adjustable spanner (English wrench). An assembly tool that visibly damages the fitting increases the chance of stress corrosion. The use of pliers with serrated jaws (for example water pump pliers) or an incorrectly adjusted tool must therefore be avoided.

5. check connection

After installation, check the connection for leak tightness regarding the guidelines for the applied media.

Note: excessive tightening of the union nut can lead to leakage and rupture of the nut. A sealant must be applied to the screw threads of the transition coupling that is permitted for the used media.

re-installation

An existing connection can be removed and installed again; this is, however, not permitted for compression fittings in gas installations (see NPR 3378-11).
The compression ring can be placed again and put under tension by the union nut again. Tighten the nut by hand and further tighten it with a spanner by ⅛ to ¼ of a turn. The compression fitting can be re-installed several times; as a rule of thumb, we advise a maximum of three times.

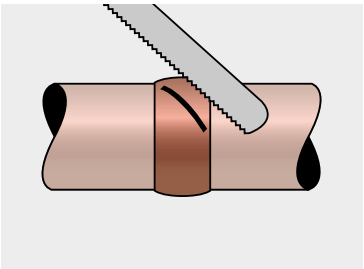

The compression ring can be removed by sawing it across without damaging the tube. Break open the ring by putting a screw-driver in the saw cut and making a twisting motion. Another technique is to carefully squeeze the ring with water pump pliers, of which the jaws are placed on the ring, while the pliers are twisted. The stretched ring can now be slid off the tube. Before making a new connection, we refer to the instructions as described before.

In the following table, the insertion depth for prefabricated and built-in situations is given.

tube Ø [mm]	insertion depth e_S [mm]
6	14
8	15
10	16
12	19
15	21
16	22
18	23
20	23
22	23
28	23
35	30
42	35
54	39

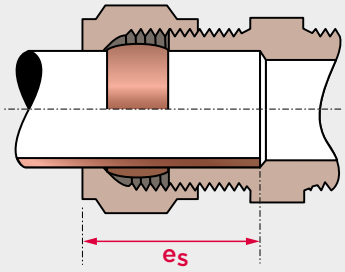

installation of a one piece reducer

When the desired fitting size is not in store and the work cannot be deferred, the reducer sets from VSH Super offer the solution.

- cut off or saw the tube to length and deburr it
- remove the standard compression ring from the fitting
- place the reducer in the fitting, so that the angled surface meets the angled surface of the housing as soon as the union nut is turned on the housing, the reducer fits perfectly into the nut. The reducer should not protrude from the fitting!
- slide the fitting over the tube and tighten the nut with a ¼ of a turn. While the union nut is being tightened, great pressure is exerted on the ingenious 'breaking band', whereby the reducer breaks – under control – into two pieces. This is clearly noticeable when tightening
- after breaking, the union nut must be tightened further by ¾ of a turn. By doing so, both parts slide into each other and the tube (as with a normal compression ring) is clamped and sealed

Note: a wide selection of reducers can be used in both water and gas installations. In the product range overview on our website, see type S1268, information is available about the reducer sets which are approved for water and/or gas installations and which are provided with a Kiwa and/or Gastec QA approval. **The approvals and guarantee are only valid when installed in combination with VSH Super compression fittings.**

installation of fittings on a toilet with a built-in cistern

For many years several brands of pre-wall systems have been equipped with a tap connector with a square section which fits in place to the outside cistern. The tap connector is also fitted with a ½" outside tapered thread for connection to a tube

the solution: type S1241 article no. 0874500 and
type S1242 article no. 0874533

the solution to install a tensionstress free piping system, in combination with tap connectors provided with the built-in cistern, are the VSH Super tap couplings with fiber rings in both a straight and 90° angled configuration. The dimension of the tap connector is a 15 mm x ½" union nut connection, our one-piece reducer 15/12, type S1268 can be used to connect 12 mm copper tubes.

The union nut connection allows a perfect position of the 90° angled coupling and when tightening it will never bump onto the square part, which will result in a completely stress-free assembly.

note: do not forget to check the presence of the fiber ring!

Installation of VSH Multi Super compression fittings

only use tubes with the same nominal diameter as the dimension given on the union nut. (Tubes from the brands TECE. Geberit Mepla, Rehau and Viega Pexfit have different diameters and for that reason cannot be used). Installation of Multi Super compression fittings must be carried out as shown below.

1. cut the tube to length

Cut the tube to the correct length.

2. place nut and ring

Slide the union nut and compression ring over the tube.

3. calibrate tube end

- calibration tool size 14 mm (article no. 3850704)
- calibration tool size 16 to 26 mm (article no. 3850000)

4. place insert

Place the insert (fitted with o-ring on the tube insertion side and a plastic ring) into the tube.

5. place tube with insert into fitting

Press the tube with the insert into the fitting until the tube stop.

6. tighten by hand

Tighten the connection by hand.

7. tighten further with wrench

- tighten further with one complete turn
- sets 25 x 22 and 26 x 22 must be tightened by 1¼ turns

Note: installation of compression fittings must only be carried out with an correct sized wrench or a well-set adjustable spanner (English wrench). Tools that visibly damage the fitting increase the chance of stress corrosion. The use of pliers with serrated jaws (such as tube wrenches and water pump pliers) or a wrongly adjusted tool must, therefore, be avoided.

calibration is necessary

The tube is rounded and chamfered on the front end to prevent damage to the o-ring on the insert. A smooth enter of the tube and perfect sealing is therefore guaranteed. The o-ring is necessary to compensate the tolerances in the tube dimensions.

After installation, check the connection for leak tightness regarding the guidelines for the applied media.

Note: excessive tightening of the union nut can lead to leakage and rupture of the union nut. A sealant must be applied to the screw threads on the transition coupling that is permitted for that medium. See the installation guidelines in this regard.

re-installation of an existing connection

A connection that has already been made can be removed and installed again in the same position. The fixed compression ring is put under tension again with the union nut, tightening it by hand and then tightening it further with a ¼ of a turn with a spanner.

To remove remove the compression ring, put a screwdriver in the slot and loosen it by making a twisting motion. The stretched ring can now be slid off the tube and must be replaced. Before fitting a new ring, we refer to the installation guidelines such as described earlier in this chapter.

The insertion depth for prefabricated and built-in situations is set out in the table below.

compression coupling Ø [mm]	insertion depth e_S [mm]
6	14
8	15
10	16
12	19
14	17
15	21
16	13
20	16
22	23
25	19
26	19
28	23

installation of VSH Super MPI sets

Be aware that the operational parameters (pressure, temperature) depend on the type of tube that is being used.

1. cut the tube to the right length

2. Calibrate and deburr the tube with the appropriate tool

3. put the compression set in the fitting in the correct manner

4. tighten the union nut by hand

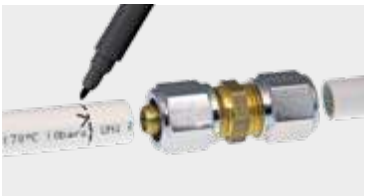

5. mark the insertion depth on the tube (13 mm)

6. place the tube in the fitting. The marking must be visible

7. tighten the union nut with 1½ turns (2 turns for M22 x 16 and M22 x 20)

built-in

manifolds

To connect the VSH Super compression fittings and MPI sets. VSH Super has DZR brass made manifolds to which these components can be connected.

The connections are suitable for compression nuts and rings 15 and MPI sets 15 and 16 mm. The female and male thread on both sides have a dimension of G¾". Our article numbers 6340501 and 6340510, MPI sets M22 x 16 and M22 x 20 are suitable for heating underblocks from TA, MMA and L&K.

bending tubes

It may be necessary to bend a tube in order to carry out the installation. Manual, hydraulic or electrical-operated pipe benders with the corresponding bend formers can be used for this. The tube manufacturer will determine the suitability of the bending tool. Stainless steel, carbon steel and copper tubes may be bent cold, in accordance with DIN EN 1057.
The tube may not be bent when warm due to the danger of corrosion.

The smallest bending radius is as follows:

stainless steel (12 - 28 mm)	r_{min} **= 3.5 x d**
carbon steel (12 - 28 mm)	r_{min} **= 3.5 x d**
copper tubes (12 - 54 mm)	r_{min} **= 3.5 x d**
in accordance with EN 1057 and DVGW-GW 392	

- a smaller bend radius is not permitted.
- diameters larger than 28 mm (carbon and stainless steel) can be bent by machine.

embedding/concealing

embedding of connections should be avoided as much as possible

Water piping systems must be embedded in accordance with the Water Worksheet provided that tubes and fittings are not affected by the material of the wall or floor. Hot water piping systems must be fitted with sheathing. It is recommandable to fit all embedded piping systems (cold water as well) with sheathing. In inaccessible areas, jacket tubes are required so that any leakage can be identified. For gas, there is a difference between accessible and inaccessible concealings. There are many specific exceptions, see NPR 3378 for a complete overview. Compression fittings with a copper tube (half hard) can be concealed accessible, without channelling, for example in pipe ducts.

tube mounting

When securing the tubes, take account of the following:
The load-bearing capacity of the mounting brackets must correspond to the weight of the tubes and must also withstand expansion and torsion forces. Mounting brackets, such as fixed points and gliding points, must therefore be placed and assembled correctly. Attachment points may only be fitted onto straight tube sections. Mounting directly onto fittings is not allowed.

metal tube fixed points and sliding points

Piping systems must have fixed points and sliding points to ensure that piping sections move in the correct direction, so that thermal expansion is absorbed by the sections provided for this purpose, i.e. the compensators. The following rules must be respected in this regard:

- never place fixed points on or right next to tube connections
- sliding points can only allow tube movements in the intended direction and cannot obstruct them
- if an axial compensator is used in a section, always place a fixed point at both ends capable of absorbing all the forces acting on it
- preferably use rubber-lined stirrups to reduce noise and vibration and to optimize distribution of tension

plastic tube fixed points and sliding points

- fixed brackets make any axial movement of the tubes impossible, and for that reason must be fitted to both sides of a fitting
- the tube clamps that make up a fixed mounting bracket may not be installed directly on the fittings and fitting sleeves, as this can prevent the thermal movement of the tube
- if fixed mounting points for T-pieces are installed, care should be taken that the brackets that support the tube are not placed on branches that have a smaller diameter than the size of the tube from which the branch emanates. In this situation, tubes with a large diameter can cause forces that could then cause damage to a smaller diameter tube
- pivot points or guide brackets allow the tube only axial movement and can be viewed as radial fixed mounting points. Do not forget that the tube brackets prevent side-to-side movement of the tube. Their position determines the length of the expansion loop.

mounting bracket intervals

The tube brackets must installed regarding the necessary intervals to support the weight of the tubes. If the fixing of a pivot point disturbs the necessary length of the expansion loop, a support should be fitted on the underside of the tube.

guidelines for distances of mounting brackets for metal tube

mounting bracket distance guidelines

Ø tube diameter [mm]	maximum interval [m] horizontal	maximum interval [m] vertical
15	1.25	1.88
18	1.50	2.55
22	2.00	3.00
28	2.25	3.38
35	2.75	4.13
42	3.00	4.50
54	3.50	5.25

Observance of the above distances between attachment points is not sufficient in itself. Thermal expansion also needs to be appropriately compensated in horizontal stretches and therefore, the distances above may need to be adjusted.

plastic tube mounting bracket intervals

The maximum permitted installation intervals between two mounting brackets are given in the table.

tube diameter	14 x 2.0	16 x 2.0	20 x 2.0	25/26 x 2.5
maximum tube clamp interval [m]	1.2	1.2	1.3	1.5

pressure test

As soon as a piping system is installed, it must be checked for leaks before being covered up and concealed. With potable water and heating installations, the pressure test can be carried out with water, air or inert gases. The tested medium and the results of the test must be documented in a so-called pressure test report.

Important: A pressure test of the piping system must be carried out in all cases. Before being covered up, insulated, painted or walled in, a piping system must first undergo a pressure test in order to be certain that there are no leaks. Pressure tests must always be performed in accordance with local regulations. As a rule of thumb, a pressure of 1.5 times the operating pressure is used for pressure tests with water.

Important: When testing a carbon steel installation, make sure that no water remains in the piping system afterwards, in order to avoid the risk of corrosion, unless the system is going to be put into service shortly afterwards.

Important: When testing water installations, always make sure to use clean, potable water.

pressure test of potable water systems

Important: The pressure test with water in a potable water piping system that has already been installed is performed in accordance with the ZVSHK/BHKS technical bulletins.
The medium used for the pressure test with water must be of potable water quality (free of oil and other impurities) in order to avoid any contamination of the piping system. After being filled with pure, potable water, the piping system must be properly bled.

pressure test with air

Important: Pressure tests with air or inert gases can be carried out in accordance with the ZVSHK/BHKS technical bulletins, ‘Pressure Test with Air or Inert Gases’, (at 100 l tube capacity a leak tightness test at 110 mbar for at least 30 minutes. For every additional 100 l, the time must be increased by 10 minutes. After the leak tightness test, the strength of the connection is to be tested during 10 minutes at a maximum of 3 bar up to DN50, maximum of 1 bar >DN50). For safety reasons, the maximum test pressure is set at 3 bar. This maximum test pressure also applies for gas piping systems.

pressure test for heating and cooling systems

Important: As a rule, the pressure test for piping systems that have already been installed are carried out with water in accordance with DIN-VOB 18380.

- the test pressure at each point of the system must be 1.3 times the operating pressure and at least 1 bar overpressure
- immediately after the cold water pressure test, the water must be heated up to the highest hot water temperature on which the calculations were based in order to be certain that the system remains tight at high temperatures
- during the test no pressure drops should occur
- the pressure test must be adequately documented

pressure test for natural gas systems

Important: The pressure test for natural gas and liquid gas systems must be performed in accordance with local regulations.

flushing the piping system

Each piping system must be flushed thoroughly before being put into use so that any dirt and other matter is removed from the inside of the tube surface so that hygiene problems and corrosion damage are largely prevented. Potable water systems must be flushed as soon as possible after installing the tubes and after the pressure test. The cold and hot water tubes should be flushed separately, intermittently and under pressure with an air-water mixture (EN 806, Part 4). Installation regulations, such as the Potable Water Act and worksheets, must be followed. In exceptional cases, it may be necessary to flush the system with a disinfecting substance.

When flushing with water containing a disinfectant addition, special care must be taken to ensure that no chlorides remain in the piping system. Always make sure to flush with clean, potable water.

general installation information

thermal expansion

The level of thermal expansion within piping systems depends on tube material, tube length and temperature deviations. This expansion needs to be taken into account during the installation. Small changes in length can be accommodated by calculating adequate space for expansion as well as through the elastic properties of the piping system itself. More substantial changes in length need to be offset by other methods like installation of special expansion compensation devices, fixed anchoring points and brackets.

Expansion can also be compensated by the using tube segments or U-bends. The level of expansion to be compensated can be predetermined by calculating the changes in length using the following formula:

$$\Delta l = l \times \alpha \times \Delta T$$

Δl = total expansion [mm]
l = length of the segment [m]
ΔT = temperature difference [K]
α = expansion coefficient, where:
for **plastic multilayer tube**
α = 0.025 mm/mK
for VSH SudoXPress **Stainless tube 1.4401**
α = 0.0166 mm/mK
for VSH SudoXPress **Stainless tube 1.4521/1.4301**
α = 0.0104 mm/mK
for VSH SudoXPress **Carbon tube**
α = 0.0108 mm/mK
for **copper tube**
α = 0.0170 mm/mK

The following tables show the expansion of various tubes depending on length and the rise in temperature.

l [m]	ΔT [K]							
	10	20	30	40	50	60	80	90
0.5	0.13	0.25	0.38	0.50	0.63	0.75	1.00	1.13
1	0.25	0.50	0.75	1.00	1.25	1.50	2.00	2.25
2	0.50	1.00	1.50	2.00	2.50	3.00	4.00	4.50
3	0.75	1.50	2.25	3.00	3.75	4.50	6.00	6.75
4	1.00	2.00	3.00	4.00	5.00	6.00	8.00	9.00
5	1.25	2.50	3.75	5.00	6.25	7.50	10.00	11.25
6	1.50	3.00	4.50	6.00	7.50	9.00	12.00	13.50
7	1.75	3.50	5.25	7.00	8.75	10.50	14.00	15.75
8	2.00	4.00	6.00	8.00	10.00	12.00	16.00	18.00
9	2.25	4.50	6.75	9.00	11.25	13.50	18.00	20.25
10	2.50	5.00	7.50	10.00	12.50	15.00	20.00	22.50
15	3.75	7.50	11.25	15.00	18.75	22.50	30.00	33.75
20	5.00	10.00	15.00	20.00	25.00	30.00	40.00	45.00
25	6.25	12.50	18.75	25.00	31.25	37.50	50.00	56.25
30	7.50	15.00	22.50	30.00	37.50	45.00	60.00	67.50
35	8.75	17.50	26.25	35.00	43.75	52.50	70.00	78.75
40	10.00	20.00	30.00	40.00	50.00	60.00	80.00	90.00

total thermal expansion Δl [mm] multilayer tube (VSH MultiPress, VSH Multicon, Henco)

l [m]	ΔT [K]									
	10	20	30	40	50	60	70	80	90	100
1	0.16	0.32	0.48	0.64	0.80	0.96	1.12	1.28	1.44	1.60
2	0.32	0.64	0.96	1.28	1.60	1.92	2.24	2.56	2.88	3.20
3	0.48	0.96	1.44	1.92	2.40	2.88	3.36	3.84	4.32	4.80
4	0.64	1.28	1.92	2.56	3.20	3.84	4.48	5.12	5.76	6.40
5	0.80	1.60	2.40	3.20	4.00	4.80	5.60	6.40	7.20	8.00
6	0.96	1.92	2.88	3.84	4.80	5.76	6.72	7.68	8.64	9.60
7	1.12	2.24	3.36	4.48	5.60	6.72	7.84	8.96	10.08	11.20
8	1.28	2.56	3.84	5.12	6.40	7.68	8.96	10.24	11.52	12.80
9	1.44	2.88	4.32	5.76	7.20	8.64	10.08	11.52	12.96	14.40
10	1.60	3.20	4.80	6.40	8.00	9.60	11.20	12.80	14.40	16.00
12	1.92	3.84	5.76	7.68	9.60	11.52	13.44	15.36	17.28	19.20
14	2.24	4.48	6.72	8.96	11.20	13.44	15.68	17.92	20.16	22.40
16	2.56	5.12	7.68	10.24	12.80	15.36	17.92	20.48	23.04	25.60
18	2.88	5.76	8.64	11.52	14.40	17.28	20.16	23.04	25.92	28.80
20	3.20	6.40	9.60	12.80	16.00	19.20	22.40	25.60	28.80	32.00

total thermal expansion Δl [mm], VSH SudoXPress Stainless 1.4401

l [m]	ΔT [K]									
	10	20	30	40	50	60	70	80	90	100
1	0.10	0.21	0.31	0.42	0.52	0.62	0.73	0.83	0.94	1.04
2	0.21	0.42	0.62	0.83	1.04	1.25	1.46	1.66	1.87	2.08
3	0.31	0.62	0.94	1.25	1.56	1.87	2.18	2.50	2.81	3.12
4	0.42	0.83	1.25	1.66	2.08	2.50	2.91	3.33	3.74	4.16
5	0.52	1.04	1.56	2.08	2.60	3.12	3.64	4.16	4.68	5.20
6	0.62	1.25	1.87	2.50	3.12	3.74	4.37	4.99	5.62	6.24
7	0.73	1.46	2.18	2.91	3.64	4.37	5.10	5.82	6.55	7.28
8	0.83	1.66	2.50	3.33	4.16	4.99	5.82	6.66	7.49	8.32
9	0.94	1.87	2.81	3.74	4.68	5.62	6.55	7.49	8.42	9.36
10	1.04	2.08	3.12	4.16	5.20	6.24	7.28	8.32	9.36	10.40
12	1.25	2.50	3.74	4.99	6.24	7.49	8.74	9.98	11.23	12.48
14	1.46	2.91	4.37	5.82	7.28	8.74	10.19	11.65	13.10	14.56
16	1.66	3.33	4.99	6.66	8.32	9.98	11.65	13.31	14.98	16.64
18	1.87	3.74	5.62	7.49	9.36	11.23	13.10	14.98	16.85	18.72
20	2.08	4.16	6.24	8.32	10.40	12.48	14.56	16.64	18.72	20.80

total thermal expansion Δl [mm], VSH SudoXPress Stainless 1.4521/1.4301

l [m]	ΔT [K]									
	10	20	30	40	50	60	70	80	90	100
1	0.11	0.22	0.32	0.43	0.54	0.65	0.76	0.86	0.97	1.08
2	0.22	0.43	0.65	0.86	1.08	1.30	1.51	1.73	1.94	2.16
3	0.32	0.65	0.97	1.30	1.62	1.94	2.27	2.59	2.92	3.24
4	0.43	0.86	1.30	1.73	2.16	2.59	3.02	3.46	3.89	4.32
5	0.54	1.08	1.62	2.16	2.70	3.24	3.78	4.32	4.86	5.40
6	0.65	1.30	1.94	2.59	3.24	3.89	4.54	5.18	5.83	6.48
7	0.76	1.51	2.27	3.02	3.78	4.54	5.29	6.05	6.80	7.56
8	0.86	1.73	2.59	3.46	4.32	5.18	6.05	6.91	7.78	8.64
9	0.97	1.94	2.92	3.89	4.86	5.83	6.80	7.78	8.75	9.72
10	1.08	2.16	3.24	4.32	5.40	6.48	7.56	8.64	9.72	10.80
12	1.30	2.59	3.89	5.18	6.48	7.78	9.07	10.37	11.66	12.96
14	1.51	3.02	4.54	6.05	7.56	9.07	10.58	12.10	13.61	15.12
16	1.73	3.46	5.18	6.91	8.64	10.37	12.10	13.82	15.55	17.28
18	1.94	3.89	5.83	7.78	9.72	11.66	13.61	15.55	17.50	19.44
20	2.16	4.32	6.48	8.64	10.80	12.96	15.12	17.28	19.44	21.60

total thermal expansion Δl [mm], VSH SudoXPress Carbon

l[m]	ΔT[K]									
	10	20	30	40	50	60	70	80	90	100
1	0.17	0.34	0.51	0.68	0.85	1.02	1.19	1.36	1.53	1.70
2	0.34	0.68	1.02	1.36	1.70	2.04	2.38	2.72	3.06	3.40
3	0.51	1.02	1.53	2.04	2.55	3.06	3.57	4.08	4.59	5.10
4	0.68	1.36	2.04	2.72	3.40	4.08	4.76	5.44	6.12	6.80
5	0.85	1.70	2.55	3.40	4.25	5.10	5.95	6.80	7.65	8.50
6	1.02	2.04	3.06	4.08	5.10	6.12	7.14	8.16	9.18	10.20
7	1.19	2.38	3.57	4.76	5.95	7.14	8.33	9.52	10.71	11.90
8	1.36	2.72	4.08	5.44	6.80	8.16	9.52	10.88	12.24	13.60
9	1.53	3.06	4.59	6.12	7.65	9.18	10.71	12.24	13.77	15.30
10	1.70	3.40	5.10	6.80	8.50	10.20	11.90	13.60	15.30	17.00
12	2.04	4.08	6.12	8.16	10.20	12.24	14.28	16.32	18.36	20.40
14	2.38	4.76	7.14	9.52	11.90	14.28	16.66	19.04	21.42	23.80
16	2.72	5.44	8.16	10.88	13.60	16.32	19.04	21.76	24.48	27.20
18	3.06	6.12	9.18	12.24	15.30	18.36	21.42	24.48	27.54	30.60
20	3.40	6.80	10.20	13.60	17.00	20.40	23.80	27.20	30.60	34.00

total thermal expansion Δl [mm], copper

thermal expansion in plastic tube piping systems

length of the expansion loop (l_b).

If the change in length (Δl) is known, then the necessary length of the expansion loop (l_b), which depends on the tube diameter, can be calculated.

$$l_b = 36 \times \sqrt{(d \times \Delta l)}$$

l_b = necessary length of the expansion loop [mm]
Δl = total change in length [mm]
d = external diameter of the tube [mm]

The length of the expansion loop (l_b) in mm needed to compensate the expansion in the tubes, is shown in the table.

Δl [mm]	tube diameter [mm]							
	14	16	20	25	32	40	50	63
5	301	322	360	402	455	509	569	639
10	426	455	509	569	644	720	805	904
15	522	558	624	697	789	882	986	1,107
20	602	644	720	805	911	1,018	1,138	1,278
30	738	789	882	986	1,115	1,247	1,394	1,565
40	852	911	1,018	1,138	1,288	1,440	1,610	1,807
50	952	1,018	1,138	1,273	1,440	1,610	1,800	2,020
60	1,043	1,115	1,247	1,394	1,577	1,764	1,972	2,213
70	1,127	1,205	1,347	1,506	1,704	1,905	2,130	2,391
80	1,205	1,288	1,440	1,610	1,821	2,036	2,277	2,556
90	1,278	1,366	1,527	1,708	1,932	2,160	2,415	2,711
100	1,347	1,440	1,610	1,800	2,036	2,277	2,546	2,857

length of the expansion loop (l_b)

required length of compensators to absorb thermal expansion

If the expansion is greater than the piping system is able to absorb without the tension becoming too high, additional measures must be taken, such as the use of expansion compensators, expansion loops or u-bends. The length of the expansion joints can be calculated using the following formulas in different situations.

type L

Determine the length of the expansion loop (l_b) as follows:

1 determine using the table on page 27 or by calculating the length of the thermal expansion (Δl), using the length of the tube (l) and the temperature difference (ΔT)
2 based on the calculated length of the thermal expansion (Δl) for the tube (l) and the outer diameter of the tube, the length of the expansion loop (l_b) can be determined from the table on page 27

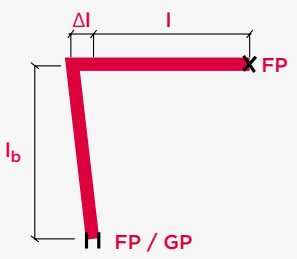

l_b = the length of the expansion loop
SS = the sliding support (so that the tube can only move axially)
FP = the fixed point (prevents the tube from moving)
l = the initial length of the tube
Δl = the thermal expansion of the tube

type Z

Determine the length of the expansion loop (l_b) as follows:

1 determine the equivalent size $l_z = l_1 + l_2$
2 determine using the table on page 26 or by a calculation of the length of the thermal expansion (Δl_z), using the length of the tube (l_z) and the temperature difference (ΔT)
3 based on the calculated length of the thermal expansion (Δl) for the tube and the outer diameter of the tube, the length of the expansion loop (l_b) can be determined from the table on page 27

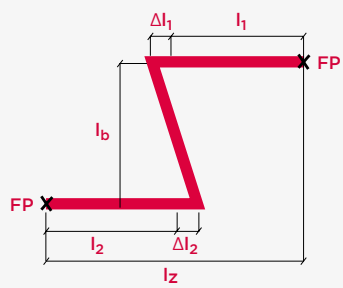

l_b = the length of the expansion loop
FP = the fixed point (prevents the tube from moving)
l_z = the initial length of the tube
Δl_z = the thermal expansion of the tube

type U

Determine the length of the expansion loop (l_b) as follows:

1 determine the equivalent size $l_u = (l_1 + l_2)/1.8$
2 determine using the table on page 27 or by a calculation of the length of the thermal expansion (Δl_u), using the length of the tube (l_u) and the temperature difference (ΔT)
3 based on the calculated length of the thermal expansion (Δl) for the tube and the outer diameter of the tube, the length of the expansion loop (l_b) can be determined from the table on page 27

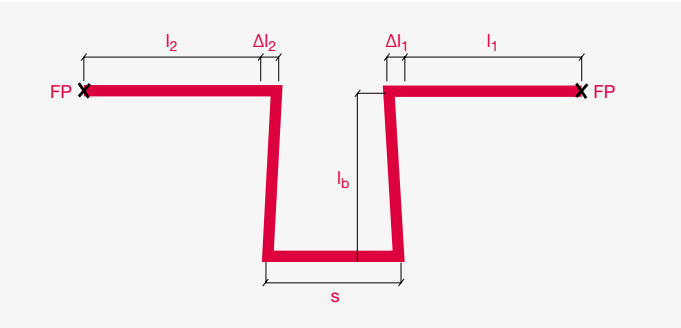

l_b = the length of the expansion loop
FP = the fixed point (prevents the tube from moving)
Δl = the thermal expansion of the tube
s = the length of the U-shaped compensation loop

The length of the compensation loop (s) must ensure the free movement of the tube sections l_1 and l_2, taking into account the thickness of the tube insulation and the installation circumstances.

$$s \geq 2x\ d_{ins} + \Delta l_1 + \Delta l_2 + s_{min}$$

d_{ins} = thickness of the insulation
Δl_1, Δl_2 = thermal expansion in tube sections l_1 and l_2
s_{min} = minimum length of the fitting diameter or the radius of curvature of the tube

The length of the tube (s) must be as short as possible. If the length of the tube (s) is more than 10% of the values l_1 or l_2, a fixed point must be placed in the middle of the tube (s). In this case the length of the compensation loop (l_b) can be calculated as type Z. This should be done on both sides of the fixed point.

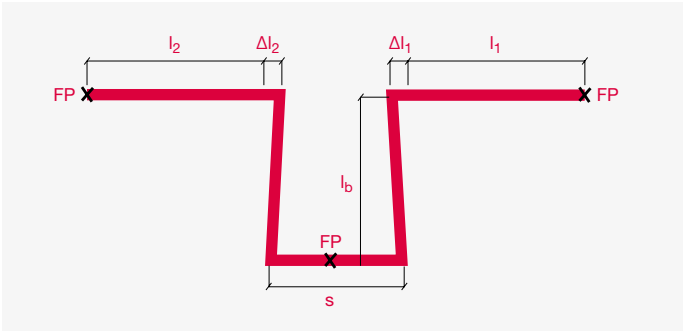

l_b = the length of the supported loop
FP = the fixed point (prevents the tube from moving)
l = the initial length of the tube
Δl = the thermal expansion of the tube
s = the length of the U-shaped compensation loop

securing and expansion of a riser

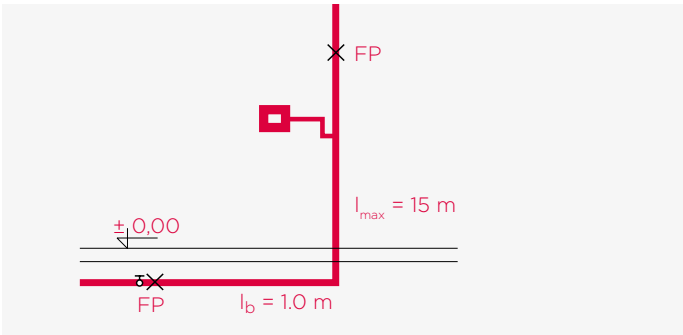

every place where a fixture is fitted is a fixed point

- a 15 m long tube section will expand by 30 mm if the temperature increases by 80°C. This requires an expansion loop l_b of 1.0 m long for a tube with a 25 mm diameter
- based on the principle that the expansion loop at the base of the riser l_b = 1.0 m, and with the fixed point is located halfway up the riser, a riser height of 30 m is possible with a tube diameter of 25 mm
- a greater riser height can be possible if we allow a greater expansion of the tube section above the fixed point. The length of the expansion loop l_b can also be increased.
- the branch is best carried out in the type Z configuration. Respect the necessary length of the expansion loop
- the floor clearance must allow for movement by the tube both lengthwise and crosswise, to cater for a change in the shape caused by the expansion of section l_b

thermal expansion in metal tube piping systems

required length of compensators to absorb thermal expansion

If the expansion is greater than the piping system is able to absorb without the tension becoming too high, additional measures must be taken, such as the use of expansion compensators, expansion loops or u-bends.

The length of the expansion joints can be calculated using the following formulas in different situations:

type Z

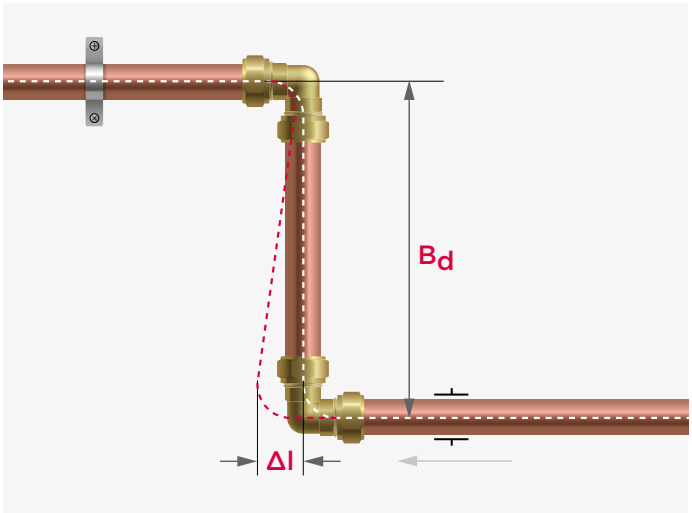

$$B_d = k \times \sqrt{(d \times \Delta l)}$$

B_d = length of the expansion compensator [mm]
k = material constant
= 45 for stainless and carbon steel tubes
= 35 for copper tubes
d = external diameter of the tube [mm]
Δl = thermal expansion [mm]

calculation examples

configuration	: see figure above
tube material	: stainless 1.4401
tube diameter (d)	: 22 mm
tube length (l)	: 16 m
temperature difference (ΔT)	: 60°C

Calculation of the thermal expansion Δl

$$\Delta l = 16 \times 0.0166 \times 60 = 15.936 \text{ mm}$$

Calculation of the length of the expansion compensator B_d

$$B_d = 45 \times \sqrt{(22 \times 15.936)} = 843 \text{ mm}$$

type T

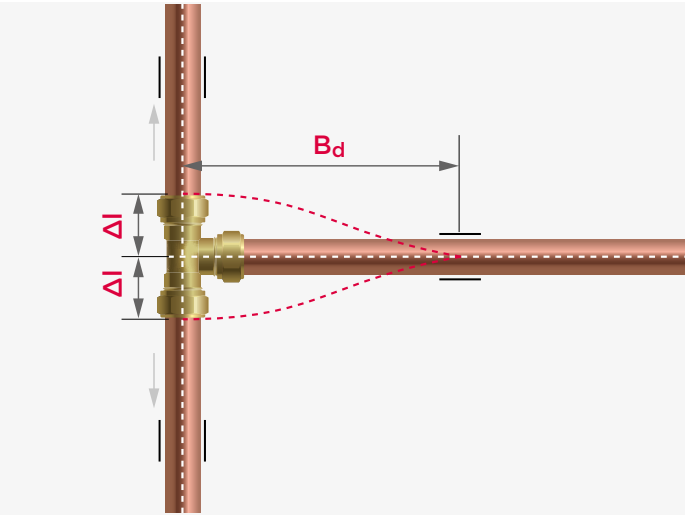

$$B_d = 1.44 \times k \times \sqrt{(d \times \Delta l)}$$

B_d = length of the expansion compensator [mm]
k = material constant
= 45 for stainless and carbon steel tubes
= 35 for copper tubes
d = external diameter of the tube [mm]
Δl = thermal expansion [mm]

calculation examples

configuration	: see figure above
tube material	: stainless 1.4401
tube diameter (d)	: 22 mm
tube length (l)	: 16 m
temperature difference (ΔT)	: 60°C

Calculation of the thermal expansion Δl

$$\Delta l = 16 \times 0.0166 \times 60 = 15.936 \text{ mm}$$

Calculation of the length of the expansion compensator B_d

$$B_d = 1.44 \times 45 \times \sqrt{(22 \times 15.936)} = 1213 \text{ mm}$$

type U

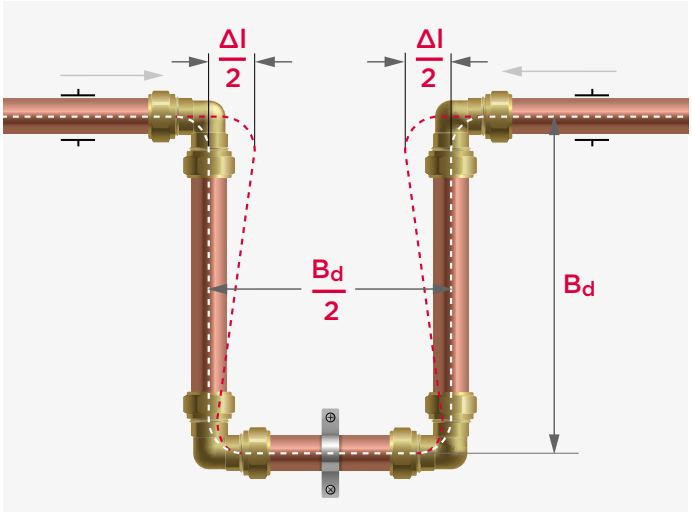

$$B_d = k \times \sqrt{(d \times \Delta l)} / 1.8$$

B_d = length of the expansion compensator [mm]
k = material constant
= 45 for stainless and carbon steel tubes
= 35 for copper tubes
d = external diameter of the tube [mm]
ΔI = thermal expansion [mm]

calculation examples

configuration	: see figure above
tube material	: stainless 1.4401
tube diameter (d)	: 22 mm
tube length (l)	: 16 m
temperature difference (ΔT)	: 60°C

Calculation of the thermal expansion ΔI

$$\Delta l = 16 \times 0.0166 \times 60 = 15.936 \text{ mm}$$

Calculation of the length of the expansion compensator B_d

$$B_d = 45 \times \sqrt{(22 \times 15.936)} / 1.8 = 468 \text{ mm}$$

For stainless and carbon steel, the required length of the compensator B_d can be read directly from the following graphs depending on the thermal expansion ΔI to be compensated.

graph 1: to determine the length B_d of carbon and stainless steel tube in situations shown in the type Z configuration (page 29).

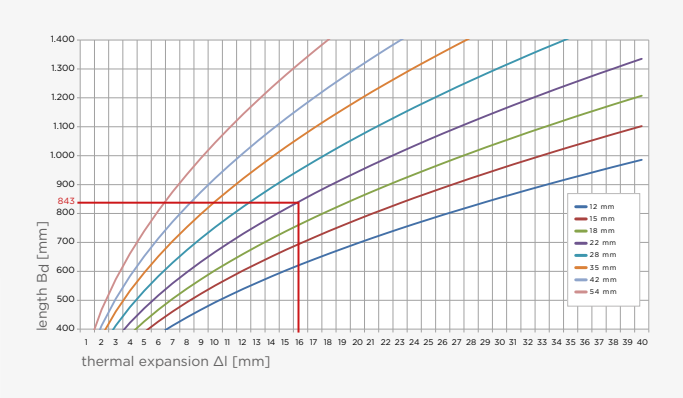

Note: in situations shown in the type T configuration (page 29), multiply the B_d value from graph 1 by factor 1.44.

graph 2: to determine the B_d length of carbon steel and stainless steel tube in situations shown in the type U configuration (page 30).

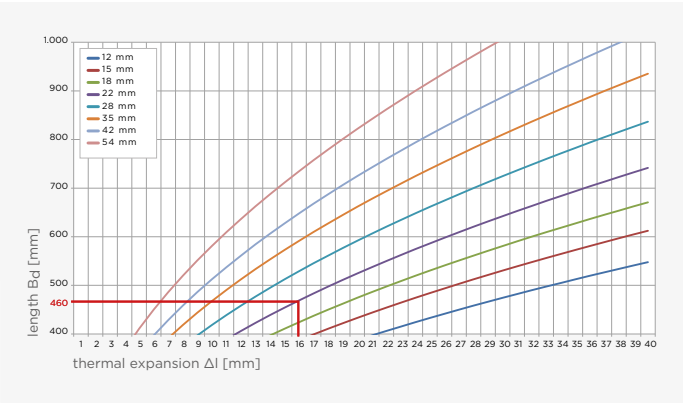

pressure loss

Every fluid that flows through a piping system experiences continuous and local flow resistances, the so-called pressure drops. There is a difference between the continuous and the local pressure drop. A continuous pressure drop is mainly caused by the flow resistance in straight tube sections, which essentially is a result of the friction between the fluid and the tube wall. Local pressure drops, on the contrary, are those flow resistances that are created by, for instance, a change in the internal tube diameter, a tube branch, an elbow, etc.

continuous pressure drop

To calculate the resistance of a fluid flow in a straight section of a piping system, first determine the resistance in a unit of length and then multiply the total length by this value. This value can be determined analytically using the Hazen-Williams formula.

$$p = \frac{6.05 \times 10^5}{C^{1.85} \times di^{4.87}} \times Q^{1.85}$$

p = pressure loss in the tube [bar/m]
Q = flow through the tube [l/min]
di = mean internal diameter of the tube [mm]
C = constant for type and condition of the tube
= 140 for VSH SudoXPress Stainless and Carbon

If there is the need to perform these calculations, please consult the relevant specialized literature. For the normal installation calculations, the appropriate values as given in the diagrams hereafter can be used. The pressure drop value R and the flow velocity [m/s] for a given water flow rate can be determined simply and quickly in this way.

Once R and the actual or equivalent length of the piping system are known, the total pressure drop over the particular segment can be calculated. The diagram shows the values that apply to water with a temperature of 80°C. It can be seen that R changes with temperature, so a correction is needed. Graphs can be prepared for the different operating temperatures and various velocity ranges.

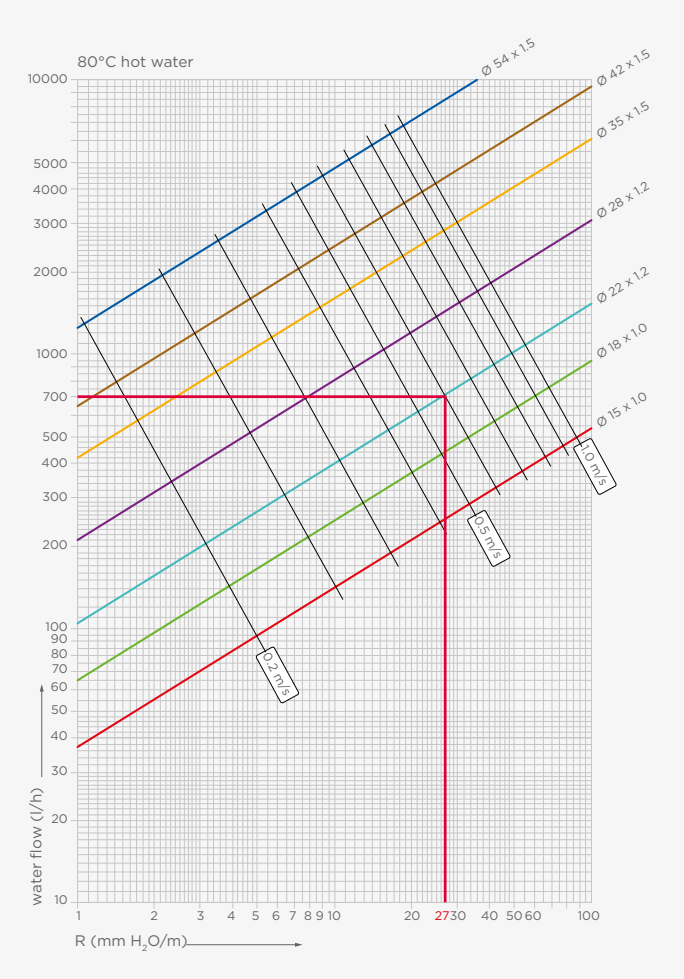

pressure drop on hot water with a temperature of 80°C

In addition to temperature, water additives e.g. anti-freeze, will affect the value R and needs to be corrected accordingly, It would be too complex to use several diagrams to perform a calculation for each temperature. That is why the following diagram can be used, It gives the correction factor K_c that needs to be applied to R for the actual temperature of the fluids.

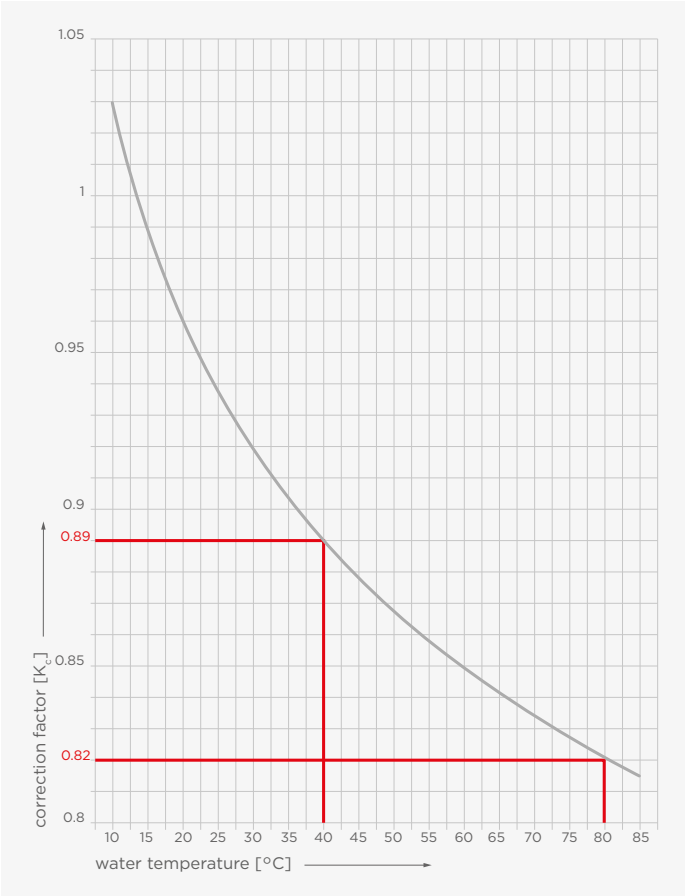

correction factor for different water temperature [K_c]

The following example explains the use of the diagram. If we assume a flow rate of 700 l/h for a tube of 22 x 1.2 mm, the value of R is 27 mm H_2O/m (± 270 Pa/m) for a temperature of 80°C. Imagine that we want to calculate the value of R for a water temperature of 40°C. We must first find the value of R for this temperature and then multiply that value by the correction factor K_c for a temperature of 40°C.

$$R = (27/0.82) \times 0.89 = 29.3 \text{ mm } H_2O/\text{m } 293 \text{ [Pa/m]}$$

local pressure loss

A local pressure drop is, as mentioned at the start of this section, the resistance to flow that results from changes in the flow direction and cross-sectional area, flow splitting over several channels, etc. In general there are two ways of calculating such flow resistances: the direct analytical method and the method that uses 'equivalent lengths'.

equivalent length method

This method assumes that the pressure drop at a particular point can be considered to be the same as an equivalent increase in the length of a straight piping system with the same internal diameter. The final result is a pressure drop that is equal to the real pressure drop. In other words, the actual length of the piping system is added to all the equivalent lengths of the individual joints. The actual length is then multiplied by the pressure drop per unit-length R in order to be able to calculate the total pressure drop of the system.

The pressure loss for a flow rate of 0.75 m/s are shown in the tables below, in equivalent metres of tube length.

dimension	12	15	22	28	35	42	54
	0.1	0.1	0.1	0.1	0.1	0.1	0.1
	-	0.5	0.6	0.7	1.2	-	-
	0.5	0.5	0.8	0.8	1.2	1.4	1.8
	0.1	0.1	0.2	0.2	0.2	0.2	0.2
	0.5	0.5	0.8	0.8	1.2	1.4	1.8
	-	0.5	0.8	0.8	1.2	-	-
	-	0.1	0.1	0.2	0.2	-	-

For reducer fittings the value from the table above must be added to the value in the table below.

dimension	12	15	22	28
10	0.2	-	-	-
22	0.3	0.2	-	-
28	-	0.3	0.1	-
35	-	0.4	0.2	0.1

pressure loss in plastic piping systems

load rating and flow speed

The values set out in the table below apply to a temperature difference of 20°C across the radiator. The flow rate is at most 0.6 m/s, as the noise from the flow can become annoying at higher rates. To determine the total resistance per section, the necessary tube lengths must be multiplied by the pressure loss per meter. The capacity of the heating circuit pump must be great enough to overcome this resistance. The table below is determined by the formula:

$$P = q \times C \times \Delta T$$

P = radiator capacity in Watt [W]
q = flow rate [l/s]
C = specific heat of water = 4180 J/s
ΔT = temperature difference [°C]

flow rate [m/s]

	0.1		0.2		0.3	
tube	**p**	**q**	**p**	**q**	**p**	**q**
14 x 2.0	657	0.00785	1313	0.01571	1970	0.02356
16 x 2.0	945	0.01131	1891	0.02262	2836	0.03393
20 x 2.0	1681	0.02011	3362	0.04021	5043	0.06032
25 x 2.5	2626	0.03142	5253	0.06283	7879	0.09425
26 x 3.0	2626	0.03142	5253	0.06283	7879	0.09425
	0.4		**0.5**		**0.6**	
14 x 2.0	2626	0.03142	3283	0.03927	3940	0.04712
16 x 2.0	3782	0.04524	4727	0.05655	5673	0.06786
20 x 2.0	6724	0.08042	8404	0.10053	10085	0.12064
25 x 2.5	10505	0.12566	13132	0.15708	15758	0.18850
26 x 3.0	10505	0.12566	13132	0.15708	15758	0.18850

pressure loss in sanitary en heating piping systems

The diagram shows the pressure loss for a given flow velocity by tube dimension and flow rate. The medium is water with a temperature of 10°C. P = Q x ΔT x 1.163 which is power in Watt.

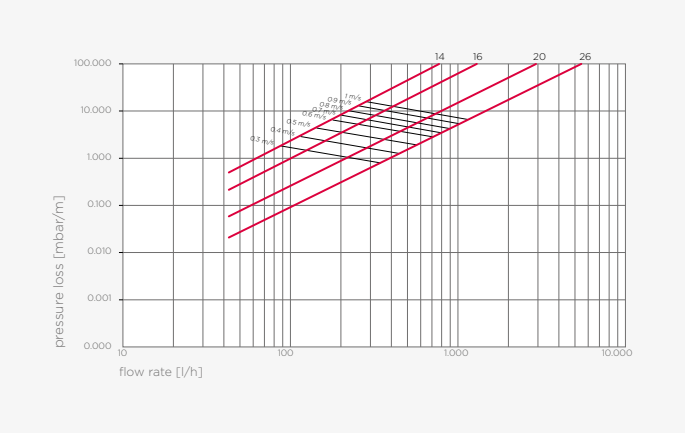

local pressure loss of VSH Multi Super fittings for plastic tube

The flow resistances for a water flow rate of 0.75 m/s are given in equivalent metres of tube length.

dimension	14	16	20	25	26
	1.4	1.8	1.8	2.0	2.0
	3.1	5.0	3.2	4.0	4.0
	2.0	2.6	2.2	2.5	2.5
	3.4	4.8	3.2	4.0	4.0
	2.1	2.6	1.7	1.8	1.8

heat loss

Just as with all other types of tube made from metal or plastic materials, adequate measures with VSH tubes must be taken to limit heat loss. Please consult the relevant regulations on minimum insulation thickness and insulation standards.

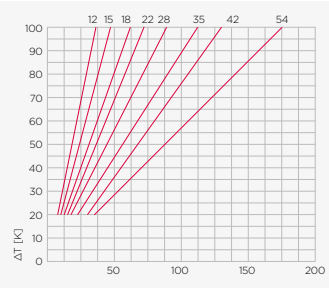

linear heat loss [W/m]
VSH SudoXPress Stainless tube

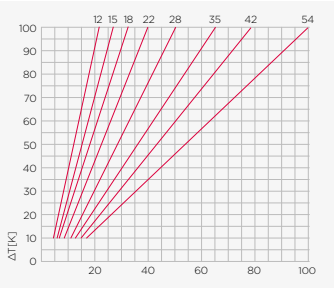

linear heat loss [W/m]
copper tube

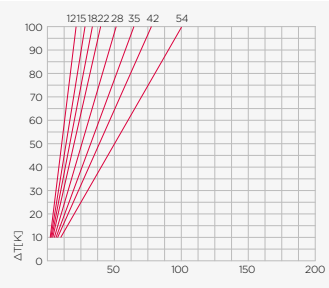

linear heat loss [W/m]
VSH SudoXPress Carbon tube

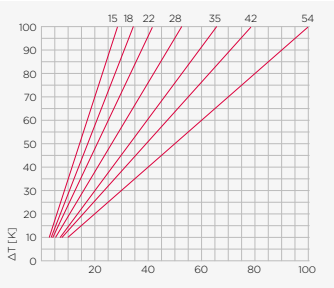

linear heat loss [W/m]
VSH SudoXPress Carbon tube with polypropylene coating

The diagrams show the linear heat losses of the tube according to their diameter and temperature difference. The temperature difference is the difference between the temperature of the liquid inside the piping system and the surrounding air temperature. This applies to uninsulated tubing that is laid against the walls or partitions of the building.

heat loss plastic multilayer tube

See table on page 17 for the characteristics of multilayer tube, from which heat loss can be determined.

friction loss

In a fluid flow, friction loss is the loss of pressure that occurs in piping systems due to the effect of the fluid's viscosity near the surface of the tube. The following tables show the friction loss R in the tube with a flow rate Q and flow velocity at a temperature of 10°C for VSH SudoXPress Stainless tubes in accordance with DVGW - Worksheet GW 541 (2004), series 2, with a wall roughness k of 0.0015 mm. The tables for VSH SudoXPress Carbon Steel and copper tube, as well as the tables for different situations (other temperatures or applications), are available from Aalberts integrated piping systems or can be downloaded from: www.aalberts-ips.eu.

	12 x 1.0 mm		15 x 1.0 mm		18 x 1.0 mm		22 x 1.2 mm		28 x 1.2 mm	
maximum flow-rate Qs [l/s]	R [mbar/m]	v [m/s]	R [mbar/m]	v [m/s]	R [mbar/m]	v [m/s]	R [mbar/m]	v [m/s]	R [mbar/m]	v [m/s]
0.01	0.5	0.1	0.2	0.1	0.1	-	-	-	-	-
0.02	1.6	0.3	0.5	0.2	0.2	0.1	0.1	0.1	-	-
0.03	3.2	0.4	0.9	0.2	0.4	0.1	0.1	0.1	0.1	-
0.04	5.3	0.5	1.5	0.3	0.6	0.2	0.2	0.1	0.1	0.1
0.05	7.7	0.6	2.2	0.4	0.8	0.2	0.3	0.2	0.1	0.1
0.10	25.4	1.3	7.3	0.8	2.7	0.5	1.0	0.3	0.3	0.2
0.15	51.5	1.9	14.8	1.1	5.5	0.7	1.9	0.5	0.7	0.3
0.20	85.4	2.5	24.5	1.5	9.1	1.0	3.3	0.6	1.1	0.4
0.25	126.6	3.2	36.2	1.9	13.5	1.2	4.8	0.8	1.6	0.5
0.30	175.0	3.8	49.9	2.3	18.5	1.6	6.5	1.0	2.1	0.6
0.35	230.3	4.5	65.8	2.8	24.3	1.7	8.6	1.1	2.8	0.7
0.40	292.2	5.1	83.1	3.0	30.8	2.0	10.8	1.3	3.5	0.8
0.45	360.8	5.7	102.4	3.4	37.9	2.2	13.4	1.4	4.4	0.9
0.50	435.8	6.4	123.8	3.8	45.7	2.5	16.0	1.5	5.3	1.0
0.55			146.5	4.1	54.1	2.7	19.0	1.8	6.2	1.1
0.60			171.1	4.5	63.2	3.0	22.2	1.9	7.3	1.2
0.65			197.5	4.9	72.9	3.2	25.5	2.1	8.3	1.3
0.70			225.5	5.3	83.2	3.5	29.1	2.2	9.5	1.4
0.75					94.1	3.7	33.0	2.4	10.8	1.5
0.80					105.6	4.0	37.0	2.5	12.0	1.6
0.85					117.6	4.2	41.2	2.7	13.5	1.7
0.90					130.3	4.5	45.6	2.9	14.8	1.8
0.95					143.6	4.7	50.3	3.0	15.4	1.9
1.00					157.4	5.0	55.1	3.2	17.9	2.0
1.05							60.1	3.3	19.6	2.1
1.10							65.3	3.5	21.2	2.2
1.15							70.7	3.7	23.0	2.3
1.20							76.3	3.8	24.8	2.4
1.25							82.1	4.0	26.7	2.5
1.30							86.1	4.1	28.6	2.6
1.35							94.2	4.3	30.7	2.8
1.40							100.8	4.5	32.7	2.9
1.45							107.1	4.6	34.8	3.0
1.50							113.9	4.8	37.0	3.1
1.55							120.8	4.9	39.2	3.2
1.60							127.9	5.1	41.5	3.3
1.65									43.8	3.4
1.70									46.3	3.5
1.75									48.7	3.6
1.80									51.2	3.7
1.85									53.8	3.8
1.90									56.5	3.9
1.95									59.3	4.0
2.00									62.0	4.1

	12 x 1.0 mm		15 x 1.0 mm		18 x 1.0 mm		22 x 1.2 mm		28 x 1.2 mm	
maximum flow-rate Qs [l/s]	R [mbar/m]	v [m/s]	R [mbar/m]	v [m/s]	R [mbar/m]	v [m/s]	R [mbar/m]	v [m/s]	R [mbar/m]	v [m/s]
2.05									64.8	4.2
2.10									67.6	4.3
2.15									70.5	4.4
2.20									73.5	4.5
2.25									76.5	4.6
2.30									79.6	4.7
2.35									82.8	4.8
2.40									86.0	4.9

	35 x 1.5 mm		42 x 1.5 mm		54 x 1.5 mm	
maximum flow-rate Qs [l/s]	R [mbar/m]	v [m/s]	R [mbar/m]	v [m/s]	R [mbar/m]	v [m/s]
0.2	0.3	0.2	0.1	0.2	0.0	0.1
0.4	1.1	0.5	0.4	0.3	0.1	0.2
0.6	2.3	0.7	0.9	0.5	0.3	0.3
0.8	3.8	1.0	1.5	0.7	0.5	0.4
1.0	5.7	1.2	2.2	0.8	0.7	0.5
1.2	7.8	1.5	3.1	1.0	0.9	0.6
1.4	10.3	1.7	4.0	1.2	1.2	0.7
1.6	13.1	2.0	5.1	1.3	1.6	0.8
1.8	16.2	2.2	6.3	1.5	1.9	0.9
2.0	19.5	2.5	7.6	1.7	2.3	1.0
2.2	23.1	2.7	9.0	1.8	2.6	1.1
2.4	27.0	3.0	10.5	2.0	3.1	1.2
2.6	31.2	3.2	12.1	2.2	3.6	1.3
2.8	35.7	3.5	13.8	2.3	4.1	1.4
3.0	40.4	3.7	15.6	2.5	4.6	1.5
3.2	45.3	4.0	17.5	2.7	5.2	1.6
3.4	50.6	4.2	19.5	2.8	5.8	1.7
3.6	56.1	4.5	21.6	3.0	6.5	1.8
3.8	61.8	4.7	23.8	3.2	7.1	1.9
4.0	67.8	5.0	26.2	3.3	7.7	2.0
4.2	74.1	5.2	28.6	3.5	8.4	2.1
4.4			31.0	3.7	9.2	2.2
4.6			33.6	3.9	10.0	2.3
4.8			36.3	4.0	10.8	2.4
5.0			39.1	4.2	11.6	2.5
5.2			42.0	4.4	12.5	2.6
5.4			44.9	4.5	13.3	2.8
5.6			48.0	4.7	14.2	2.9
5.8			51.1	4.9	15.0	3.0
6.0			54.4	5.0	16.1	3.1
6.2					17.1	3.2
6.4					18.0	3.3
6.6					19.1	3.4
6.8					20.2	3.5
7.0					21.3	3.6
7.2					22.3	3.7
7.4					23.5	3.8
7.6					24.7	3.9
7.8					25.9	4.0
8.0					27.0	4.1
8.2					28.3	4.2
9.0					33.5	4.6
10.0					40.6	5.1

friction loss values (VSH SudoXPress Stainless tubes)

corrosion

All VSH Super compression fittings fully satisfy the requirements set out in the ISO 6957 standard. Nevertheless stress corrosion can occur under particular conditions in brass and lead to failure of the material. In the following paragraphs instructions are given to prevent the occurrence of corrosion problems in the normal areas of application. A distinction must be made on the basis of inner and outer corrosion and the area of application. We shall further examine the application possibilities of different materials combined in one installation (combi-installations).

There are different kinds of corrosion: chemical corrosion, electro-chemical corrosion, internal and external local corrosion, stray current corrosion, etc. All these kinds of corrosion have very particular chemical or mechanical causes. The following paragraphs provide some simple hints on how to avoid such problems.

electro-chemical corrosion

Electro-chemical corrosion occurs under the following circumstances:

- an electrochemical potential difference between both parts
- the presence of a conductive fluid (electrolyte), such as water
- the presence of oxygen (O_2)

A distinction must be made between heating installations and water supply installations. When properly installed and operated there will be no significant amounts of oxygen in heating installations and therefore very little corrosion. In potable water installations however, oxygen contents are very high, nearly reaching the saturation point. It is of primary importance that Aalberts integrated piping systems components are installed only downstream of other, metallurgically inferior (less noble) components that are possibly present in these kinds of installations. For example, it is possible to install branches with stainless steel tubes from a piping system consisting of carbon steel tubes. In such cases, non-ferrous metal or plastic connection pieces must be used (see DIN 1988).

Another important factor is the ratio between the surface of the noble metal and that of the less noble metal. The higher this ratio, the greater the corrosion rate may be. It is therefore recommended that you avoid using carbon steel extensions and connection pieces and use stainless steel or brass fittings instead.

stray currents corrosion

Corrosion by stray currents rarely occurs in practice and is immediately recognisable as pitting occurs on the outside of the tube. Stray current corrosion requires a direct current that turns the metal into an anode. The current, which in practice and despite insulation measures penetrates into earth and from there into other neighbouring metal structures, such as a water supply installation, runs through a particular stretch of the system, before it returns to earth again. In order to penetrate into the piping system, earth current must have an entry point at a spot where the protective cover of the tube or connection is damaged or missing.

For this reason, metal piping systems must be earthed (see EU Regulations). Direct current installations are generally not used in domestic housing and no serious problems occur with alternating current. Research has shown that problems with stray currents rarely occur and do not depend on the type of metal.

internal corrosion

heating installations

The penetration of oxygen in **closed-loop** heating installations will be prevented if high-quality accessories and compensators with closed membranes are used. When filling the installation, the small quantity of oxygen contained in the water is directly absorbed into the inner tube surface, in the process of which a thin layer of iron oxide is formed and after which there is no longer any possibility of corrosion. The loss in wall thickness can be disregarded. The heating-circuit water is practically oxygen-free after this reaction.

stainless steel

Stainless steel tubes and fittings are suitable for all **open** and **closed-loop heating installations.**
Combi-installations: Stainless steel can be used in combi-installations with other materials in any sequence.

carbon steel

Internal corrosion is normally impossible in **closed-loop** heating installations with carbon steel tubes and fittings as oxygen from outside cannot penetrate the installation.
Combi-installations: Unalloyed carbon steel can be used without any problems and can be combined with other metals in any sequence in closed-loop systems.

copper

Copper is suitable for all open and closed-loop heating systems.
Combi-installations: Copper can be used with other metals in any sequence in combi-installations.

other combination possibilities
Carbon steel – copper – stainless steel.
Combi-installations: These materials can be combined in all **closed-loop** systems.

water additives
Oxygen scavengers and corrosion inhibitors can be added to the heating-circuit water as a preventive measure against inadmissible oxygen absorption. Observe the supplier's instructions for use.

(potable) water installations

stainless steel
Stainless steel fittings and tubes have the advantage that stainless steel is passive in potable water. The physical and chemical properties of the potable water are not affected by stainless steel. In this passive state, no internal corrosion will occur. The danger of heavy metal contamination is avoided and the growth of bacteria is countered by the use of stainless steel tubes and connections. Pitting or ring corrosion can only occur if the chloride content of the water is significantly higher than the maximum level allowed under current regulations. Stainless steel components are suitable for all water treatment methods (water softening) for potable water. They are also corrosion-resistant as regards demineralised and distilled water, and water containing glycol. Stainless steel fittings and tubes are, however, not suitable for dosing systems, for example, for disinfectants, which are added to the potable water. Stainless steel fittings and tubes are also suitable for all other open and closed-loop water systems (such as cooling water).
Combi-installations: The corrosion behaviour of stainless steel is not influenced by its use in combi-installations independent of the direction of the flow of water (no flow rule). Stainless steel can be used in any sequence in combi-installations. Discolouration from a deposit of foreign corrosion products does not indicate corrosion on the stainless steel.
Stainless steel can be used with all copper alloys (bronze, copper or brass) in a combi-installation. There is no risk of contact corrosion with stainless steel.

carbon steel
Carbon steel tubes and fittings are not permitted in potable water installations. Contact corrosion will occur with carbon steel if it comes into direct contact with stainless steel.
The possibility of contact corrosion is negligibly small if bronze, copper or brass fittings are used between a carbon steel tube and a stainless steel tube. Contact corrosion on a carbon steel tube can also be prevented by using 50 mm couplings made of bronze, copper or brass.

copper
The physical and chemical properties of potable water can be affected by copper in the event of inner corrosion. An unfavourable potable water composition can also lead to corrosion.

The limit values for the use of copper material with respect to the salt content of the potable water must therefore correspond to the legal requirements for potable water. If these limit values are adhered to and the potable water composition does not deteriorate, copper is suitable for potable water installations.

Combi-installations with copper and carbon steel: the following rule is important if copper and carbon steel tubes are used in water systems, including open water systems, because of the various properties of the metals:

Flow from base metal to noble metal	
base	carbon steel
↓	copper
noble	stainless steel

Copper must always be used downstream of carbon steel couplings or tubes.

external corrosion

There are few situations in which outer corrosion occurs in buildings. It is, however, possible in many cases that installations are exposed for a longer period to undesired penetration of rain, humidity or dampness and this can lead to problems. Responsibility for taking relevant measures rests, however, with the user and the installer. Only suitable corrosion protection can offer permanent certainty against corrosion. One way of doing so is to use "closed cell" insulation, which must be applied in a guaranteed waterproof condition. Suitable primers - or metallic paints may offer minimal corrosion protection. It is advisable to always use corrosion protection on the tubing in situations where corrosion is likely to occur (damp room, crawl spaces, etc.).

stainless steel
Outer corrosion can only occur in the following circumstances:
- if stainless steel heat-conducting tubing (50°C) comes into contact with building and insulating materials containing chlorides (as the result of humidity)
- if water vapour on stainless steel heat-conducting pipelines leads to a local chloride concentration
- if stainless steel tubes (including cold water tubes) comes into contact with chlorine gas, saltwater or brine or (oxygen-saturated) water with a high chlorine content

If there is the danger of building materials coming into contact over a long period with highly chlorinated water, suitable corrosion protection must be used. Stainless steel tubes in cement floors will not be subject to electrolytic outer corrosion in connection with potential equalisation.

carbon steel
Special attention must be paid to preventing outer corrosion where an environment remains humid for longer periods. Only in cases of sporadic short-term exposure to humidity, carbon steel will also be resistant against corrosion for a longer period. Carbon steel tube connections must be protected in cases of increased risk of corrosion due to electrolytic outer corrosion (or longer periods of humidity). A polypropylene coating offers carbon steel tubes effective corrosion protection.

copper and copper gas
Copper's high resistance to corrosion renders corrosion-protection measures superfluous. Copper tubes in cement floors will not be subject to outer electrolytic outer corrosion in connection with potential equalisation. However, copper tubing must sometimes also be protected from the impact of outer corrosion, such as sulphites, nitrites and ammonia. Gas tubes must be protected against corrosion in accordance with local guidelines, such as e.g. NEN 1078-NPR 3378-10.

impact of application and processing

Corrosion may occur due to incorrectly designed installations and faulty commercial applications. The points below must be kept in mind.

tube cutting
A tube may not be cut by grinding due to the creation of heat.

tube bending
A tube may not be bent when warm. The heating of the tube alters the structure of the material (sensitisation) and inter-crystalline corrosion can take place.

heat transfer (e.g. with a heating band)
Heat transfer from outside inwards must be prevented as this can lead to the build-up of film on the inside of the tube wall. This film can cause an increase in the concentration of chloride ions, which cause pitting in critical concentrations.

crevice corrosion
When soldering stainless steel tubes when applying liquid media, crevice corrosion may occur. In the case of TIG welding of stainless steel, discolouration occurs at the welding joints, which may lead to corrosion on contact with salt water. This discolouration, above all on the inner side of the tube, can only be rectified with varnish, which is not practical with installed tubes. When using VSH Super compression fittings, this will not occur.

stainless steel – copper – carbon steel
With all materials (copper, stainless steel, carbon steel), water line corrosion can occur in the presence of a three-phase boundary (water, metal, gas (air)). This corrosion will be avoided when, after the tubes have been filled for the first time, the tubes always remain completely filled and do not remain partly empty. Partial filling occurs whenever, for example, the tubes are emptied after the water pressure has been tested, in which case a pressure test using gas/air is to be recommended.

effect of insulation

Insulation does not, as a rule, offer any protection against corrosion, except in the case of "closed cell insulation" (sealed watertight), which offers effective protection against corrosion. The installation instructions of the supplier of the insulation, material must always be followed carefully. Remove dust, dirt, oil or water from the tubing prior to insulating.

The different sections of the insulation material must be carefully joined, taking care that no moisture or water can enter the material. Also take care that the water barrier of the insulation material is not damaged during installation, as moisture could otherwise penetrate under the insulation material.

stainless steel
Insulating materials that release chloride ions in water or which could cause a local increase in chloride ions are not permitted. The weight ratio of water-solution chloride ions in the thermal insulation of the tubes may note exceed 0.05% (AS quality).

carbon steel
No corrosion can occur if there is no humidity between the insulation material and the tube. If there is a possibility of humidity (condensation) occurring under the insulation, the outside of the tube will corrode.

copper
Insulation materials for copper must be nitrate-free. The nitrate content may not be more than 0.02%.

stress corrosion

Stress corrosion is a form of corrosion that leads to crack formation in metals as a result of interaction between the metal, the environment and mechanical load (tensional stress when installing). Stress corrosion can only occur where combinations of the following factors occur:

- use of a materials prone to stress corrosion (for example, brass)
- the presence of ammonia in the insulation material or other corrosive substances in the vicinity of the installation
- the formation of condensation on the installation (moisture)
- tensional stress (or residual stress) on the material

tensional or installation stress
Brass fittings can be manufactured in different ways: hot pressing, turning of raw material or casting. A high concentration of stress can occur during manufacture through, for example, shrinkage stresses during hot pressing or tension when extracting from raw material. With the last process, cold deformation occurs, which leads to residual stress in the material. These residual stresses can cause tensional stress (on the upper surface) of the material. Much more important however, is installation stress. When tightening the union nut on the compression fitting, critical stress can occur, where the internal taper of the union nut presses onto the compression ring. This tightening torque causes deformations, whereby stress is created, above all, in the union nut. The chance of stress corrosion can be reduced by completely loosening and retightening the union nut, after it has been tightened for the first time. In this way, the deformation tension built up in the nut is virtually removed. It is important to apply the required number of turns. An installation tool that visibly damages the fitting, significantly increases the chance of stress corrosion. The use of pliers with serrated jaws (such as tube wrenches and water pump pliers) or a wrongly adjusted tool must therefore be avoided.

moisture
As noted previously, tension on its own does not cause stress corrosion. An important condition for the occurrence of corrosion is the presence of moisture. In a poorly ventilated room that is damp, condensation can form on cold tubes and fittings. This condensation is, in principle, quite pure and does not cause corrosion problems. However, the condensation can absorb gases from the surroundings and thereby become corrosive.

ammonia
Ammonia must be mentioned in this context in particular. Ammonia can originate from a range of other substances, such as cleaning materials, human and animal excretions, foam rubber (insulation material), building materials (cements) and similar substances.

cooling tubes/heat pumps
As a consequence of the introduction of heat pumps, more cooling tubes are being installed. Whenever brass compression fittings are fitted to these tubes and the tube is completely insulated from damp with foam rubber, then stress corrosion can also occur in the brass fittings through a combination of factors. During the production of foam rubber insulation, a low quantity of ammonia forms in the material. The emission of very low amounts of ammonia from the damp-proof insulation can, in combination with moisture and a particular tension in the brass, lead to stress corrosion in the brass.

In high humidity conditions, where there is insulation on the cooling tube and a temperature difference between the metal surface and closed-in moist air, condensation forms on the metal. A very thin film of moisture at the atomic level and a very low quantity of ammonia are sufficient for the formation of an aggressively corrosive chemical environment on the brass surface. In combination with a particular stress, stress corrosion can occur on the brass material as a result. The stress corrosion can have a range of causes as described above. In the circumstance outlined here, the insulation material is the source of the ammonia. **The combination of brass and ammonia must be avoided at all times.**

Protecting the brass by applying a chrome, nickel or paint coating to the fitting offers inadequate protection against stress corrosion,

product liability
Damage caused by stress corrosion does not fall under the product warranty since all VSH Super and VSH Multi Super compression fittings satisfy the requirements set down in the ISO 6957 standard, which does not change the fact that stress corrosion can occur if a combination of the above-mentioned factors is present.

warranty

Please contact Aalberts integrated piping systems for the most recent warranty conditions that apply to VSH Super.

VSH Super

compression fittings

S1200 straight coupling
(2 x compression)

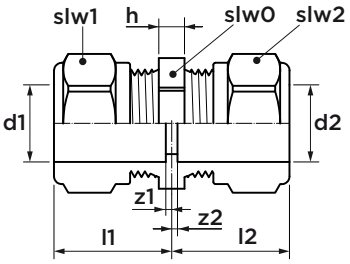

material: brass

dimension	article no.	K/G	l1/l2	z1/z2	h	slw0	slw1/slw2
8	0860081	-	17	2	4	13	14
10	0860090	K/G	19	3	5	15	17
12	0860200	K/G	21	2	5	17	19
15	0860301	K/G	23	2	6	22	24
16	0868879	-	24	2	6	24	26
18	0860409	-	25	2	6	27	27
22	0860508	K/G	26	3	7	30	32
28	0860607	K/G	27	4	8	36	39
35	0860706	K/G	31	1	9	46	46
42	0878306	K/G	37	2	12	55	55
54	0878317	K/G	41	2	11	65	70

material: DZR

dimension	article no.	K/G	l1/l2	z1/z2	h	slw0	slw1/slw2
10	0880121	G	19	3	5	15	17
12	0880132	G	21	2	5	17	19
15	0880143	G	23	2	6	22	24
18	0880154	-	25	2	6	27	27
20	0882387	-	25	3	6	27	30
22	0880165	G	26	3	7	30	32
28	0880176	G	27	4	8	36	39
35	0880187	G	31	1	9	46	46
42	0866239	G	37	2	12	55	55
54	0866272	G	41	2	11	65	70

K = Kiwa, G = Gastec approval

S1200 straight coupling nickel-/ chrome-plated
(2 x compression)

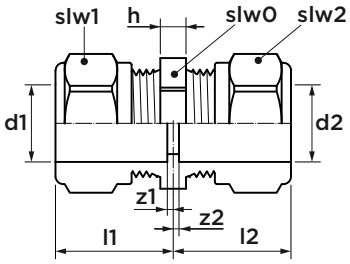

material: DZR. Surface finish: nickel-plated

dimension	article no.	K/G	l1/l2	z1/z2	h	slw0	slw1/slw2
10	0860411	G	19	3	5	15	17
12	0876315	G	21	2	5	17	19
15	0862851	G	23	2	6	22	24
22	0862862	G	26	3	7	30	32
28	0862873	G	27	4	8	36	39

material: DZR. Surface finish: chrome-plated

dimension	article no.	K/G	l1/l2	z1/z2	h	slw0	slw1/slw2
10	0896027	-	19	3	5	15	17
12	0896038	-	21	2	5	17	19
15	0896049	-	23	2	6	22	24
18	0896051	-	25	2	6	27	27
22	0896060	-	26	3	7	30	32

S1208 slip coupling
(2 x compression)

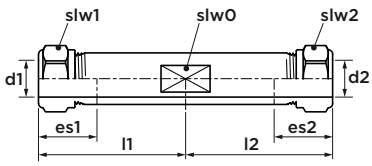

material: brass

dimension	article no.	K/G	l1/l2	es1/es2	slw0	slw1/slw2
15	0876854	K/G	60	21	18	24
22	0876876	K/G	61	23	26	32

S1201 reducer coupling

(2 x compression)

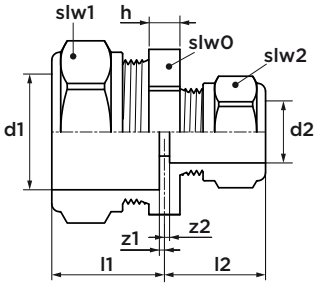

material: brass

dimension	article no.	K/G	l1	l2	z1	z2	h	slw0	slw1	slw2
12 x 10	0873103	K/G	19	22	0	5	5	17	19	17
15 x 10	0873136	K/G	24	22	2	5	6	22	24	17
15 x 12	0860211	K/G	24	21	2	2	6	22	24	19
22 x 15	0860310	K/G	25	24	2	2	7	30	32	24
22 x 18	0860741	-	26	26	3	3	7	30	32	27
22 x 20	0860783	-	27	26	3	3	6	30	32	30
28 x 15	0860387	-	27	25	3	3	8	36	39	24
28 x 22	0860519	K/G	27	26	3	3	7	36	39	32

material: DZR

dimension	article no.	K/G	l1	l2	z1	z2	h	slw0	slw1	slw2
10 x 8	0880321	-	19	17	3	3	5	15	17	14
12 x 8	0880319	-	21	17	2	2	5	17	19	14
12 x 10	0880231	G	19	21	2	2	5	17	19	17
15 x 8	0880242	-	24	17	2	2	5	15	24	14
15 x 10	0880253	G	24	22	2	5	6	22	24	17
15 x 12	0880264	G	24	21	2	2	6	22	24	19
16 x 15	0880330	-	24	23	2	2	6	24	26	24
18 x 12	0880275	-	25	21	3	3	6	24	27	19
18 x 15	0880286	-	25	24	2	2	6	24	27	24
22 x 15	0880297	-	25	24	2	2	7	30	32	24

S1201 reducer coupling nickel-/ chrome-plated

(2 x compression)

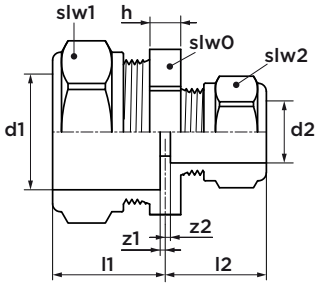

material: brass. Surface finish: nickel-plated

dimension	article no.	K/G	l1	l2	z1	z2	h	slw0	slw1	slw2
28 x 22	0871442	G	27	26	3	3	7	36	39	32

material: DZR. Surface finish: nickel-plated

dimension	article no.	K/G	l1	l2	z1	z2	h	slw0	slw1	slw2
12 x 10	0873631	G	22	19	2	3	5	17	19	17
15 x 10	0873642	G	24	22	2	5	6	22	24	17
18 x 15	0877008	-	25	24	2	2	6	24	27	24
22 x 15	0875611	G	25	24	2	2	7	30	32	24

material: DZR. Surface finish: chrome-plated

dimension	article no.	K/G	l1	l2	z1	z2	h	slw0	slw1	slw2
10 x 8	0896236	-	19	17	3	3	5	15	17	14
12 x 8	0896225	-	21	17	2	2	5	17	19	14
12 x 10	0896071	-	22	19	2	3	5	17	19	17
15 x 10	0896082	-	24	22	2	5	6	22	24	17
15 x 12	0896093	-	24	21	2	2	6	22	24	19
16 x 15	0886371	-	24	23	2	2	6	24	26	24
18 x 15	0896258	-	25	24	2	2	6	24	27	24

S1202 straight connector

(compression x male thread)

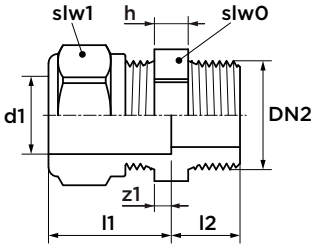

material: brass

dimension	article no.	K/G	l1	l2	z1	h	slw0	slw1
6 x G¼"	0862114	-	14	13	0	4	15	13
8 x G¼"	0861971	-	15	13	0	4	15	14
8 x G⅜"	0861993	-	15	15	0	5	19	14
10 x G¼"	0861212	K	17	12	0	4	15	17
10 x G⅜"	0861201	K	17	15	0	6	19	17
10 x G½"	0861267	K	17	12	0	5	24	17
12 x G⅜"	0861300	K	19	15	0	6	19	19
12 x R⅜"	0877580	K/G	19	18	0	6	17	19
12 x R½"	0857505	K/G	19	20	0	7	21	19
12 x G¾"	0861520	-	19	15	0	7	30	19
15 x G⅜"	0861311	K	22	14	0	6	21	24
15 x R⅜"	0861498	K/G	22	18	0	7	21	24
15 x G½"	0861377	K	22	15	0	7	24	24
15 x R½"	0861401	K/G	22	23	0	7	21	24
15 x G¾"	0861597	K	22	17	0	8	30	24
15 x R¾"	0861850	K/G	22	22	0	6	27	24
16 x R½"	0877602	-	23	22	0	7	24	26
18 x R½"	0861630	-	23	23	0	7	24	27
18 x R¾"	0861586	-	23	23	0	6	27	27
20 x R½"	0878262	-	23	23	0	6	27	30
20 x R¾"	0862070	-	23	23	0	6	27	30
22 x G½"	0861454	K	23	16	0	6	30	32
22 x R½"	0877646	K/G	23	20	0	7	30	32
22 x G¾"	0861509	K	23	17	0	7	30	32
22 x R¾"	0861905	K/G	23	23	0	7	30	32
22 x G1"	0861619	-	23	20	0	6	39	32
22 x R1"	0861927	K/G	23	28	0	8	36	32
28 x R¾"	0861003	K/G	24	24	0	7	24	39
28 x G1"	0861608	K	24	22	0	9	36	39
28 x R1"	0861949	K/G	24	29	0	8	36	39
28 x G1¼"	0861696	-	24	23	0	9	42	39
35 x G1"	0861621	-	30	19	0	8	42	46
35 x G1¼"	0861707	-	30	20	0	9	46	46

K = Kiwa, G = Gastec approval

material: DZR

dimension	article no.	K/G	l1	l2	z1	h	slw0	slw1
8 x G⅜"	0880431	-	15	15	0	6	19	14
8 x G½"	0880473	-	15	12	0	5	24	14
10 x G¼"	0880429	-	17	12	0	4	15	17
10 x G⅜"	0880440	-	17	15	0	6	19	17
10 x G½"	0880484	-	17	12	0	5	24	17
12 x G⅜"	0880451	-	19	15	0	6	19	19
12 x G½"	0880495	-	19	13	0	5	24	19
15 x G⅜"	0880462	-	22	14	0	6	21	24
15 x G½"	0880506	-	22	15	0	7	24	24
15 x G¾"	0880781	-	22	17	0	8	30	24
16 x G½"	0885951	-	23	15	0	6	24	26
18 x G⅜"	0886633	-	23	15	0	6	21	27
18 x G½"	0880517	-	23	15	0	6	24	27
18 x G¾"	0880528	-	23	17	0	7	30	27
22 x G½"	0880594	-	23	16	0	6	30	32
22 x G¾"	0880539	-	23	17	0	7	30	32
22 x G1"	0880792	-	23	20	0	6	36	32
28 x G¾"	0880385	-	24	18	0	7	36	39
28 x G1"	0880541	-	24	22	0	9	36	39
35 x G1"	0880605	-	30	19	0	8	42	46
35 x G1¼"	0880550	-	30	20	0	9	46	46
42 x G1½"	0866393	-	36	19	0	10	55	55
54 x G2"	0866415	-	39	20	0	11	65	70

S1202 straight connector nickel-/chrome-plated

(compression x male thread)

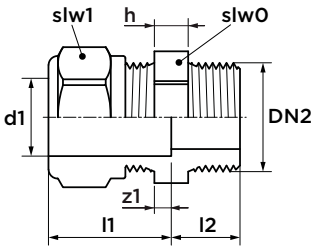

material: brass. Surface finish: nickel-plated

dimension	article no.	K/G	l1	l2	z1	h	slw0	slw1
15 x R½"	0862917	G	22	23	0	7	21	24
18 x R½"	0874863	-	23	23	0	7	24	27
18 x R¾"	0876953	-	23	23	0	6	27	27
20 x R¾"	0878405	-	23	23	0	6	27	30
22 x R¾"	0868549	G	23	23	0	7	30	32
22 x R1"	0875996	G	23	28	0	8	36	32
28 x R1"	0868571	G	24	29	0	8	36	39

material: DZR. Surface finish: nickel-plated

dimension	article no.	K/G	l1	l2	z1	h	slw0	slw1
10 x G⅜"	0874104	-	17	15	0	6	19	17
10 x G½"	0861344	-	17	12	0	5	24	17
12 x G⅜"	0873730	-	19	15	0	6	19	19
15 x G½"	0873939	-	22	15	0	7	24	24
15 x G¾"	0875974	-	22	17	0	8	30	24
22 x G½"	0868538	-	23	16	0	6	30	32
28 x G1"	0873994	-	24	22	0	9	36	39

material: DZR. Surface finish: chrome-plated

dimension	article no.	K/G	l1	l2	z1	h	slw0	slw1
10 x G½"	0896302	-	17	12	0	5	24	17
12 x G⅜"	0896313	-	19	15	0	6	19	19
12 x G½"	0896324	-	19	13	0	5	24	19
15 x G½"	0896335	-	22	15	0	7	24	24
22 x G¾"	0896346	-	23	17	0	7	30	32

S1204 straight connector

(compression x female thread)

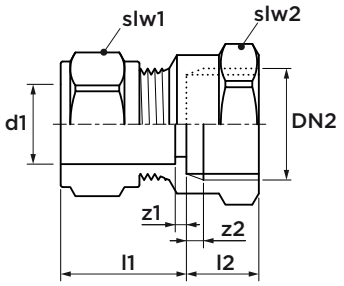

material: brass

dimension	article no.	K/G	l1	l2	z1	z2	slw1	slw2
8 x Rp⅜"	0862268		19	14	4	3	14	21
10 x Rp¼"	0862246		19	14	2	3	17	17
10 x Rp⅜"	0862281	K	20	14	3	3	17	21
10 x Rp½"	0862389	K	21	19	4	4	17	27
12 x G⅜"	0862301	K	21	10	2	3	19	21
12 x G½"	0862499	K	21	12	2	3	19	27
15 x G⅜"	0862312	K	24	10	2	3	24	21
15 x G½"	0862400	K	25	12	3	3	24	27
15 x Rp½"	0862367	K/G	24	19	2	4	24	27
15 x G¾"	0864996	K	24	13	2	4	24	30
15 x Rp¾"	0862598	K/G	26	20	4	4	24	32
16 x G½"	0868846		27	11	4	2	26	27
18 x G½"	0862411		25	13	2	4	27	27
18 x G¾"	0862587		25	13	2	4	27	30
20 x Rp½"	0873565		23	16	0	1	30	30
22 x Rp½"	0862807	K/G	23	16	0	1	32	30
22 x G¾"	0862501	K	25	13	2	4	32	30
22 x Rp¾"	0862488	K/G	25	20	2	4	32	32
22 x Rp1"	0862611	K/G	27	23	4	4	32	41
28 x Rp¾"	0877668	K	26	22	2	4	39	36
28 x G1"	0862609	K	26	16	2	4	39	39
28 x Rp1"	0862686	K/G	26	23	2	4	39	41
28 x Rp1¼"	0877681		29	25	5	4	39	50
35 x Rp1¼"	0862708		32	25	2	4	46	50
42 x Rp1½"	0878097		39	25	3	4	55	55

material: DZR

dimension	article no.	K/G	l1	l2	z1	z2	slw1	slw2
10 x Rp⅜"	0880627		20	14	3	3	17	21
10 x Rp½"	0880660		21	19	4	4	17	27
12 x Rp⅜"	0880638	G	21	14	2	3	19	21
12 x Rp½"	0880671	G	22	19	3	4	19	27
15 x Rp⅜"	0880649	G	23	14	1	3	24	21
15 x Rp½"	0880682	G	24	19	2	4	24	27
15 x Rp¾"	0880704	G	26	20	4	4	24	32
16 x Rp½"	0885995		26	18	3	3	26	27
18 x Rp½"	0880693		25	19	2	4	27	27
22 x Rp½"	0880770	G	23	17	0	1	32	30
22 x Rp¾"	0880726	G	25	20	2	4	32	32
22 x Rp1"	0880759	G	27	23	4	4	32	41
28 x Rp1"	0880737	G	26	23	2	4	39	41
35 x Rp1¼"	0880748		32	25	2	4	46	50
42 x Rp1½"	0866461		39	25	3	4	55	55
54 x Rp2"	0866481		42	30	3	4	70	70

S1204 straight connector nickel-/ chrome-plated

(compression x female thread)

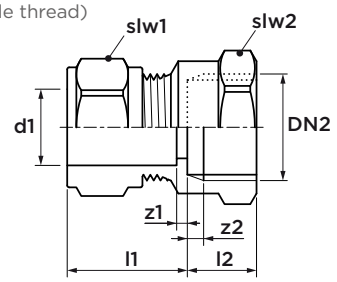

material: brass. Surface finish: nickel-plated

dimension	article no.	K/G	l1	l2	z1	z2	slw1	slw2
15 x G½"	0872401	-	24	12	3	3	24	27
18 x G¾"	0876964	-	25	13	2	4	27	30
22 x G¾"	0872410	-	25	13	2	4	32	30
22 x Rp1"	0876051	G	27	23	4	4	32	41

material: DZR. Surface finish: chrome-plated

dimension	article no.	K/G	l1	l2	z1	z2	slw1	slw2
10 x Rp½"	0896401	-	21	19	4	4	17	27
12 x Rp⅜"	0896412	-	21	14	2	3	19	21
12 x Rp½"	0896423	-	21	12	2	3	19	27
15 x Rp½"	0896434	-	24	19	2	4	24	27

S1206 stop end

(1 x compression)

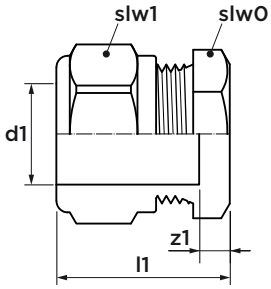

material: brass

dimension	article no.	K/G	l1	z1	slw0	slw1
12	0861124	K/G	23	4	17	19
15	0861135	K/G	27	5	21	24
22	0861157	K/G	29	6	30	32
28	0861168	K/G	31	7	36	39
35	0886908	K/G	35	5	42	46

material: DZR

dimension	article no.	K/G	l1	z1	slw0	slw1
10	0880871	-	22	5	17	17
12	0880814	G	23	4	17	19
15	0880825	G	27	5	21	24
18	0880880	-	29	6	27	27
22	0880836	G	29	6	30	32
28	0880869	G	31	7	36	39

S1275 straight coupling

(compression x male)

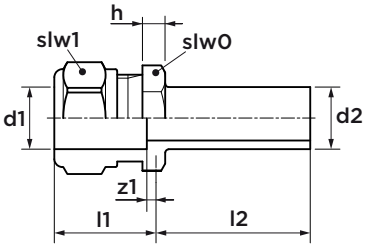

material: brass

dimension	article no.	l1	l2	z1	h	slw0	slw1
28 x Ø28	0875039	24	42	0	8	36	39

K = Kiwa, G = Gastec approval

S1206 stop end nickel-plated

(1 x compression)

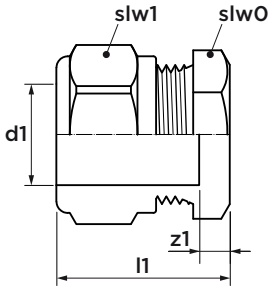

material: DZR. Surface finish: nickel-plated

dimension	article no.	K/G	l1	z1	slw0	slw1
15	0872256	G	27	5	21	24
22	0872267	G	29	6	30	32

S1207 stop end with air vent

(1 x compression)

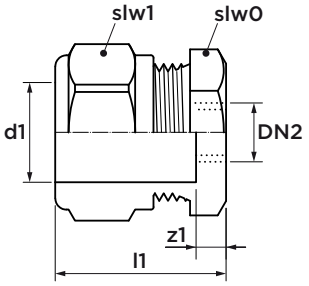

material: brass

dimension	article no.	l1	z1	slw0	slw1
22 x G⅛"	0861181	29	6	30	32

S1210 elbow 90°

(2 x compression)

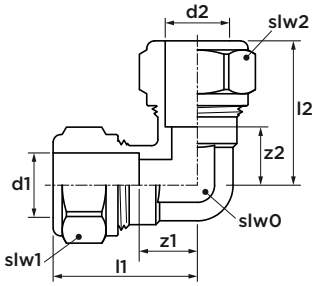

material: brass

dimension	article no.	K/G	l1/l2	z1/z2	slw0	slw1/slw2
8	0863181	-	23	8	10	14
10	0863192	K/G	26	9	12	17
12	0863203	K/G	29	10	14	19
15	0863302	K/G	33	11	17	24
18	0863401	-	37	13	22	27
22	0863500	K/G	38	15	24	32
28	0863601	K/G	42	18	30	39
35	0863709	K/G	50	19	36	46
42	0878273	K/G	59	23	46	55
54	0878284	K/G	68	28	60	70

material: DZR

dimension	article no.	K/G	l1/l2	z1/z2	slw0	slw1/slw2
8	0880913	-	23	8	10	14
10	0880924	G	26	9	12	17
12	0880935	G	29	10	14	19
15	0880946	G	33	11	17	24
18	0880957	-	37	13	22	27
22	0880968	G	38	15	24	32
28	0880979	G	42	18	30	39
35	0880981	G	50	19	36	46
42	0863731	G	59	23	46	55
54	0863753	G	68	28	60	70

S1210 elbow 90° nickel-/chrome-plated

(2 x compression)

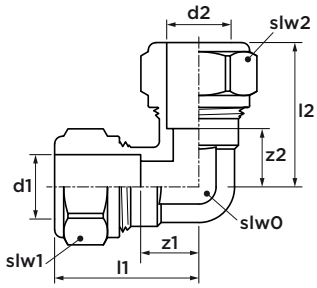

material: brass. Surface finish: chrome-plated

dimension	article no.	K/G	l1/l2	z1/z2	slw0	slw1/slw2
12	0863610	-	29	10	14	19
15	0863489	-	33	11	17	24

material: DZR. Surface finish: nickel-plated

dimension	article no.	K/G	l1/l2	z1/z2	slw0	slw1/slw2
10	0863115	G	26	9	12	17
12	0876359	G	29	10	14	19
15	0872553	G	33	11	17	24
22	0872564	G	38	15	24	32
28	0872575	G	42	18	30	39

material: DZR. Surface finish: chrome-plated

dimension	article no.	K/G	l1/l2	z1/z2	slw0	slw1/slw2
10	0896500	-	26	9	12	17
12	0896511	-	29	10	14	19
15	0896522	-	33	11	17	24
18	0896533	-	37	13	22	27
22	0896544	-	38	15	24	32

S1211 reduced angle adapter 90°

(2 x compression)

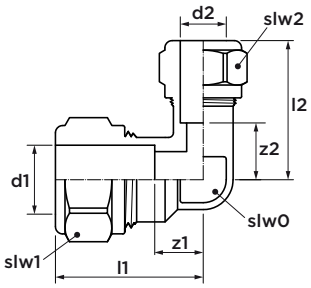

material: brass

dimension	article no.	K/G	l1	l2	z1	z2	slw0	slw1	slw2
12 x 10	0863456	K/G	28	27	9	10	12	19	17
15 x 10	0863379	K/G	32	30	8	12	14	24	17
15 x 12	0863214	K/G	31	30	9	11	14	24	19
22 x 15	0863313	K/G	36	39	11	15	17	32	24
28 x 22	0863599	K/G	39	43	15	18	24	39	32

material: DZR

dimension	article no.	K/G	l1	l2	z1	z2	slw0	slw1	slw2
15 x 12	0882816	G	31	30	9	11	14	24	19
16 x 15	0882827	-	33	35	11	13	17	26	24
22 x 15	0882838	G	36	39	11	15	17	32	24

S1211 reduced angle adapter 90° nickel-/chrome-plated

(2 x compression)

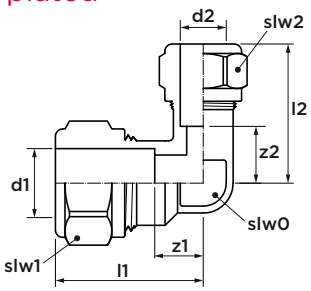

material: brass. Surface finish: nickel-plated

dimension	article no.	K/G	l1	l2	z1	z2	slw0	slw1	slw2
12 x 10	0874049	G	28	27	9	10	12	19	17
15 x 10	0863381	G	30	30	8	12	14	24	17
28 x 22	0864127	G	39	43	15	18	24	39	32

material: DZR. Surface finish: nickel-plated

dimension	article no.	K/G	l1	l2	z1	z2	slw0	slw1	slw2
22 x 15	0864105	G	36	39	11	15	17	32	24

material: DZR. Surface finish: chrome-plated

dimension	article no.	K/G	l1	l2	z1	z2	slw0	slw1	slw2
15 x 12	0886479	-	31	30	9	11	14	24	19

K = Kiwa, G = Gastec approval

S1212 angle adapter 90°

(compression x male thread)

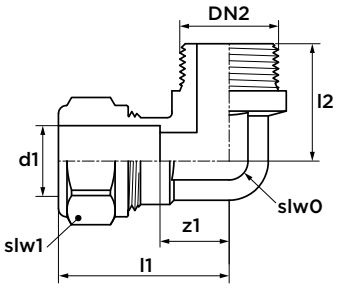

material: brass

dimension	article no.	K/G	l1	z1	l2	slw0	slw1
12 x R⅜"	0862169	K/G	29	11	27	14	19
12 x G½"	0864490	K	34	15	22	14	19
15 x G⅜"	0877701	K	36	14	25	17	24
15 x G½"	0864402	K	36	14	25	17	24
15 x R½"	0862004	K/G	33	11	35	18	24
15 x G¾"	0864512	K	39	17	26	17	24
16 x R½"	0877745	-	35	14	35	19	26
18 x R½"	0864457	-	34	11	36	18	27
18 x R¾"	0864523	-	37	14	37	24	27
22 x G½"	0862840	-	38	14	30	18	32
22 x G¾"	0864501	K	41	17	31	24	32
22 x R¾"	0862026	K/G	38	14	42	24	32
22 x G1"	0864611	K	44	20	34	24	32
28 x G¾"	0864534	K	43	21	37	30	39
28 x G1"	0864600	K	45	21	38	30	39
28 x R1"	0877767	K/G	45	21	48	30	39

material: DZR

dimension	article no.	K/G	l1	z1	l2	slw0	slw1
10 x G½"	0881056	-	32	16	21	12	17
10 x G⅜"	0881023	-	29	14	21	12	17
12 x G⅜"	0881034	-	31	13	22	14	19
12 x G½"	0881067	-	34	15	22	14	19
15 x G⅜"	0886259	-	36	14	25	17	24
15 x G½"	0881078	-	36	14	25	17	24
15 x G¾"	0881201	-	39	17	26	17	24
18 x G½"	0881089	-	38	14	27	19	27
18 x G¾"	0886270	-	37	17	37	24	27
22 x G½"	0882508	-	38	14	30	18	32
22 x G¾"	0881091	-	41	17	31	24	32
28 x G1"	0881100	-	45	21	38	30	39
35 x G1¼"	0863984	-	52	21	42	36	46
42 x G1½"	0864193	-	59	23	49	46	55

S1212 angle adapter 90° nickel-/chrome-plated

(compression x male thread)

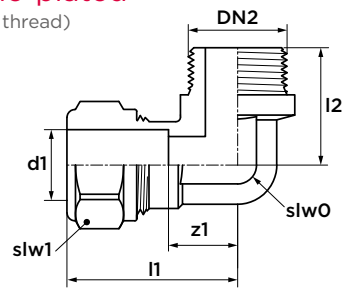

material: brass. Surface finish: nickel-plated

dimension	article no.	K/G	l1	z1	l2	slw0	slw1
15 x R½"	0862939	G	33	11	35	18	24
22 x R¾"	0875952	G	38	14	42	24	32

material: DZR. Surface finish: nickel-plated

dimension	article no.	K/G	l1	z1	l2	slw0	slw1
28 x G1"	0871079	-	45	21	38	30	39

material: DZR. Surface finish: chrome-plated

dimension	article no.	K/G	l1	z1	l2	slw0	slw1
10 x G½"	0896601	-	32	16	21	12	17
12 x G⅜"	0896610	-	31	13	22	14	19
12 x G½"	0896621	-	34	15	22	14	19
15 x G½"	0896632	-	36	14	25	17	24

S1214 angle adapter 90°

(compression x female thread)

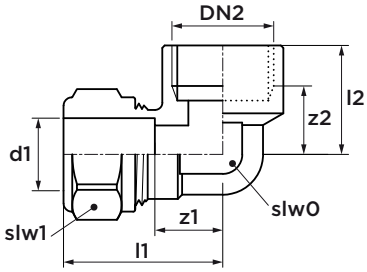

material: brass

dimension	article no.	K/G	l1	l2	z1	z2	slw0	slw1
10 x Rp⅜"	0865293	-	30	22	13	10	12	17
12 x Rp⅜"	0865304	K/G	32	22	13	10	14	19
12 x Rp½"	0865491	K/G	35	28	16	13	14	19
15 x Rp⅜"	0865315	K/G	35	22	13	10	17	24
15 x G½"	0865403	K	33	23	11	14	17	24
15 x Rp½"	0865471	K/G	37	28	15	13	17	24
15 x Rp¾"	0865513	K/G	40	31	18	14	17	24
18 x Rp½"	0865414	-	38	29	15	14	22	27
18 x Rp¾"	0865524		41	32	18	15	22	27
22 x Rp½"	0862829	K/G	38	27	15	12	24	32
22 x G¾"	0865502	K	44	26	16	17	24	32
22 x Rp¾"	0865581	K/G	41	33	18	16	24	32
22 x G1"	0865590	-	42	27	18	15	24	32
22 x Rp1"	0865689	K	44	38	21	19	24	32
28 x Rp1"	0865601	K/G	46	34	21	15	30	39

material: DZR

dimension	article no.	K/G	l1	l2	z1	z2	slw0	slw1
10 x Rp½"	0881232	-	33	28	17	13	12	17
12 x Rp⅜"	0881210	G	32	22	13	10	14	19
12 x Rp½"	0881243	G	35	28	16	13	14	19
15 x Rp½"	0881254	G	33	23	15	14	17	24
18 x Rp½"	0881265	-	38	29	15	14	22	27
22 x Rp½"	0881342	G	38	27	15	12	24	32
22 x Rp¾"	0881276	G	41	33	18	16	24	32
28 x Rp1"	0881287	G	46	34	21	15	30	39
35 x Rp1¼"	0863962	-	50	46	22	25	36	46
42 x Rp1½"	0864006	-	59	49	23	27	46	55
54 x Rp2"	0864215		68	60	28	35	60	70

S1214 angle adapter 90° nickel-/chrome-plated

(compression x female thread)

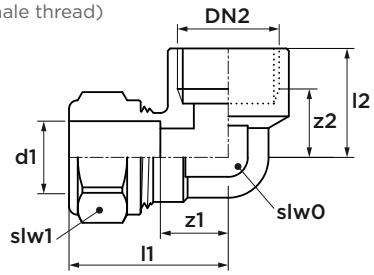

material: brass. Surface finish: nickel-plated

dimension	article no.	K/G	l1	l2	z1	z2	slw0	slw1
15 x G½"	0872883	-	33	23	11	14	17	24
15 x Rp¾"	0872641	G	40	31	18	14	17	24
22 x G¾"	0872872	-	44	26	16	17	24	32

material: DZR. Surface finish: nickel-plated

dimension	article no.	K/G	l1	l2	z1	z2	slw0	slw1
22 x Rp½"	0872685	G	38	27	15	12	24	32
28 x Rp1"	0872707	G	46	34	21	15	30	39

material: DZR. Surface finish: chrome-plated

dimension	article no.	K/G	l1	l2	z1	z2	slw0	slw1
10 x Rp½"	0896709	-	33	28	17	13	12	17
12 x Rp⅜"	0896711	-	32	22	13	10	14	19
12 x Rp½"	0896720	-	35	28	16	13	14	19
15 x Rp½"	0896731	-	33	23	15	14	17	24

K = Kiwa, G = Gastec approval

S1216 bend 90°

(2 x compression)

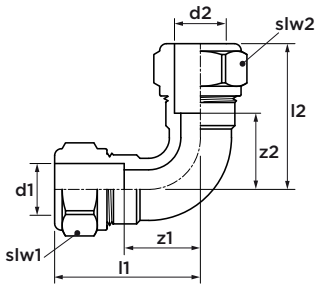

material: brass

dimension	article no.	l1/l2	z1/z2	slw1/slw2
15	0863016	42	18	24
22	0863027	51	23	32
28	0863038	52	28	39
35	0863049	64	33	46

S1218 angle adapter 90°

(compression x male)

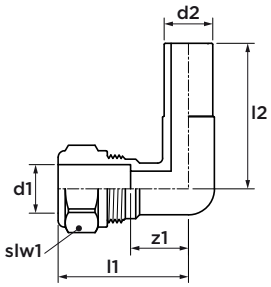

material: brass

dimension	article no.	l1	l2	z1	slw1
15 x Ø15	0312070	40	45	18	24
22 x Ø22	0862091	37	41	13	32

S1220 tee
(3 x compression)

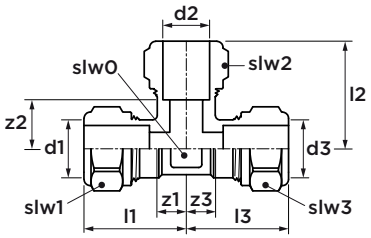

material: brass

dimension	article no.	K/G	l1/l3	l2	z1/z3	z2	slw0	slw1/slw2/slw3
8	0866701	-	23	23	8	8	10	14
10	0866987	-	26	26	9	9	12	17
12	0867009	K/G	30	32	9	9	14	19
15	0867053	K/G	32	35	10	12	17	24
18	0866998	-	36	36	12	12	22	27
22	0867174	K/G	37	40	13	16	24	32
28	0867284	K/G	41	44	16	20	30	39
35	0867394	-	50	51	19	19	36	46

material: DZR

dimension	article no.	K/G	l1/l3	l2	z1/z3	z2	slw0	slw1/slw2/slw3
8	0881419	-	23	23	8	8	12	14
12	0881430	G	30	32	9	9	14	19
15	0881441	G	32	35	10	12	17	24
18	0881452	-	36	36	12	12	22	27
22	0881463	G	37	40	13	16	24	32
28	0881474	G	41	44	16	20	30	39
35	0881485	-	50	51	19	19	36	46
42	0866613	-	59	59	23	23	46	55
54	0866635	-	68	68	28	28	60	70

S1220 tee nickel-/chrome-plated
(3 x compression)

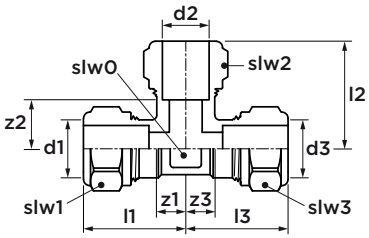

material: DZR. Surface finish: nickel-plated

dimension	article no.	K/G	l1/l3	l2	z1/z3	z2	slw0	slw1/slw2/slw3
15	0872731	G	32	35	10	12	17	24
22	0872740	G	37	40	13	16	24	32
28	0872751	G	41	44	16	20	30	39

material: DZR. Surface finish: chrome-plated

dimension	article no.	K/G	l1/l3	l2	z1/z3	z2	slw0	slw1/slw2/slw3
10	0896808	-	26	26	9	9	12	17
12	0896819	-	30	32	9	9	14	19
15	0896821	-	32	35	10	12	17	24
18	0896830	-	36	36	12	12	22	27
22	0896841	-	37	40	13	16	24	32

S1221 tee reduced
(3 x compression)

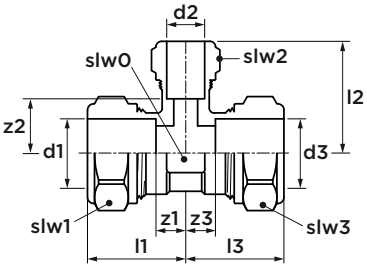

material: brass

dimension	article no.	K/G	l1/l3	l2	z1/z3	z2	slw0	slw1/ slw3	slw2
12 x 15 x 12	0867011	K/G	30	31	11	9	17	19	24
15 x 12 x 15	0867031	K/G	31	34	9	13	17	24	19
15 x 22 x 15	0867064	K/G	36	37	13	12	24	24	32
18 x 15 x 18	0867372	-	35	35	10	13	22	27	24
22 x 12 x 22	0867130	K/G	32	36	8	17	24	32	19
22 x 15 x 22	0867141	K/G	34	38	9	16	24	32	24
22 x 18 x 22	0867449	-	40	41	13	18	30	32	27
22 x 28 x 22	0867185	K/G	40	41	16	16	30	32	39
28 x 15 x 28	0867229	K/G	34	42	10	20	30	39	24
28 x 18 x 28	0867451	-	38	42	13	19	30	39	27
28 x 22 x 28	0867251	K/G	38	43	14	17	30	39	32

material: DZR

dimension	article no.	K/G	l1/l3	l2	z1/z3	z2	slw0	slw1/ slw3	slw2
12 x 10 x 12	0881551	-	30	31	9	10	14	19	17
12 x 15 x 12	0881562	G	30	31	11	9	17	19	24
15 x 10 x 15	0881584	-	30	30	8	12	17	24	17
15 x 12 x 15	0881606	G	31	34	9	13	17	24	19
15 x 22 x 15	0885973	G	36	37	13	12	24	24	32
16 x 15 x 16	0881507	-	34	35	11	13	17	26	24
18 x 12 x 18	0881639	-	32	33	10	15	22	27	19
18 x 15 x 18	0881650	-	35	35	10	13	22	27	24
22 x 12 x 22	0886314	G	32	36	8	17	24	32	19
22 x 15 x 22	0881661	G	34	38	9	16	24	32	24
22 x 18 x 22	0881751	-	37	39	13	18	24	32	27
28 x 15 x 28	0881683	G	34	42	10	20	30	39	24
28 x 22 x 28	0881694	G	38	43	14	17	30	39	32

K = Kiwa, G = Gastec approval

S1221 tee reduced nickel-/chrome-plated
(3 x compression)

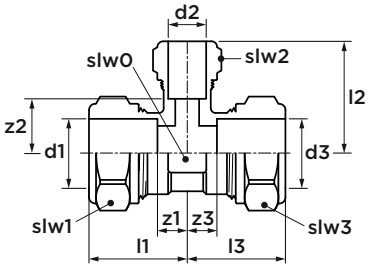

material: DZR. Surface finish: nickel-plated

dimension	article no.	K/G	l1/l3	l2	z1/z3	z2	slw0	slw1/slw3	slw2
15 x 22 x 15	0875633	G	36	37	13	12	24	24	32
22 x 15 x 22	0872071	G	34	38	9	16	24	32	24
28 x 15 x 28	0864050	G	34	42	10	20	30	39	24

material: DZR. Surface finish: chrome-plated

dimension	article no.	K/G	l1/l3	l2	z1/z3	z2	slw0	slw1/slw3	slw2
12 x 10 x 12	0896918	-	30	31	9	10	14	19	17
12 x 15 x 12	0896929	-	30	31	11	9	17	19	24
15 x 10 x 15	0896931	-	30	30	8	12	17	24	17
15 x 12 x 15	0896951	-	31	34	9	13	17	24	19
18 x 12 x 18	0896973	-	32	33	10	15	22	27	19
18 x 15 x 18	0896984	-	35	35	10	13	22	27	24
22 x 15 x 22	0897072	-	34	38	9	16	24	32	24

S1247 tee reduced
(3 x compression)

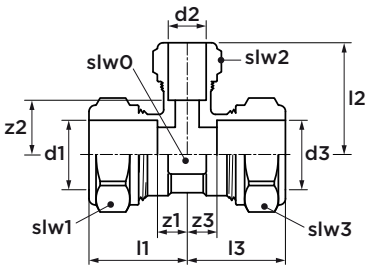

material: brass

dimension	article no.	K/G	l1	l2	l3	z1	z2	z3	slw0	slw1/ slw2	slw3
15 x 15 x 12	0867042	K/G	33	35	33	10	12	11	17	24	19
22 x 22 x 15	0867163	K/G	37	40	39	15	15	16	24	32	24
28 x 28 x 15	0867262	K/G	42	44	41	18	18	18	30	39	24
28 x 28 x 22	0867273	K/G	41	44	42	18	18	18	30	39	32

material: DZR

dimension	article no.	K/G	l1	l2	l3	z1	z2	z3	slw0	slw1/ slw2	slw3
15 x 15 x 12	0881617	G	33	35	33	10	12	11	17	24	19
22 x 22 x 15	0881672	G	37	40	39	15	15	16	24	32	24
28 x 28 x 15	0881408	G	42	44	41	18	18	18	30	39	24

S1247 tee reduced nickel-/chrome-plated
(3 x compression)

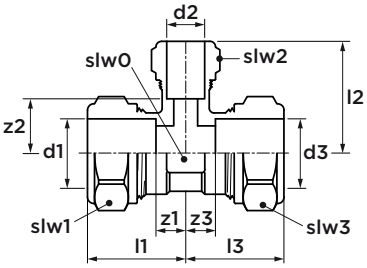

material: DZR. Surface finish: nickel-plated

dimension	article no.	K/G	l1	l2	l3	z1	z2	z3	slw0	slw1/ slw2	slw3
22 x 22 x 15	0875677	G	37	40	39	15	15	16	24	32	24

material: DZR. Surface finish: chrome-plated

dimension	article no.	K/G	l1	l2	l3	z1	z2	z3	slw0	slw1/ slw2	slw3
15 x 15 x 12	0896962	-	33	35	33	10	12	11	17	24	19
22 x 22 x 15	0896874	-	37	40	39	15	15	16	24	32	24

S1248 tee reduced nickel-/chrome-plated
(3 x compression)

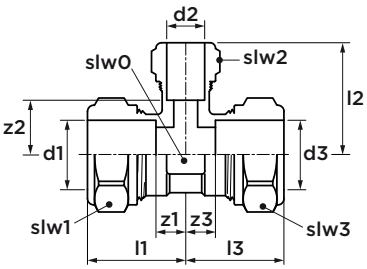

material: DZR. Surface finish: nickel-plated

dimension	article no.	K/G	l1	l2	l3	z1	z2	z3	slw0	slw1	slw2/ slw3
22 x 15 x 15	0875655	G	34	38	34	10	14	11	24	32	24

material: DZR. Surface finish: chrome-plated

dimension	article no.	K/G	l1	l2	l3	z1	z2	z3	slw0	slw1	slw2/ slw3
15 x 12 x 12	0896940	-	32	35	31	9	11	9	17	24	19
22 x 15 x 15	0886688	-	34	38	34	10	14	11	24	32	24

S1248 tee reduced
(3 x compression)

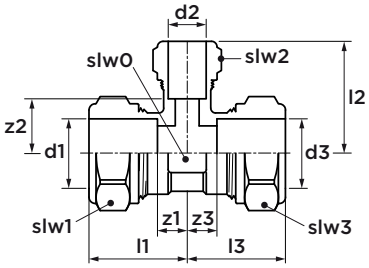

material: brass

dimension	article no.	K/G	l1	l2	l3	z1	z2	z3	slw0	slw1	slw2	slw3
15 x 12 x 12	0867020	K/G	32	35	31	9	11	9	17	24	19	19
18 x 15 x 15	0867361	-	35	35	33	11	12	10	22	27	24	24
22 x 15 x 12	0867119	K/G	34	38	30	10	14	13	24	32	24	19
22 x 15 x 15	0867121	K/G	34	38	34	10	14	11	24	32	24	24
28 x 15 x 22	0867218	K/G	35	42	33	10	20	9	30	39	24	32
28 x 22 x 15	0867231	K/G	38	43	36	14	19	14	30	39	32	24
28 x 22 x 22	0867240	K/G	38	43	39	14	17	14	30	39	32	32

material: DZR

dimension	article no.	K/G	l1	l2	l3	z1	z2	z3	slw0	slw1	slw2	slw3
15 x 12 x 12	0881595	G	32	35	31	9	11	9	17	24	19	19
18 x 15 x 15	0881641	-	35	35	33	11	12	10	22	27	24	24
22 x 15 x 15	0886292	G	34	38	34	10	14	11	24	32	24	24

S1223 tee branch female

(2x compression x female thread)

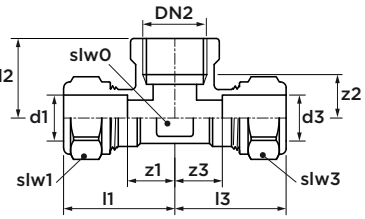

material: brass

dimension	article no.	K/G	l1/l3	l2	z1/z3	z2	slw0	slw1/ slw3
12 x Rp½" x 12	0869253	K	31	21	15	12	14	19
15 x Rp¼" x 15	0869321	K/G	32	19	10	8	17	24
15 x Rp⅜" x 15	0869330	K	33	20	11	8	17	24
15 x Rp½" x 15	0869341	K/G	36	26	15	9	24	24
18 x Rp½" x 18	0869440	-	37	26	14	11	22	27
22 x Rp⅜" x 22	0869539	K/G	34	24	11	12	24	32
22 x Rp½" x 22	0869541	K/G	37	27	13	12	24	32
22 x Rp¾" x 22	0869550	K/G	39	28	15	15	24	32
28 x G½" x 28	0869649	K	38	32	13	17	30	39
28 x G¾" x 28	0869651	K	41	32	16	16	30	39
28 x Rp1" x 28	0869660	-	53	36	19	17	30	39

material: DZR

dimension	article no.	K/G	l1/l3	l2	z1/z3	z2	slw0	slw1/ slw3
12 x Rp½" x 12	0881815	-	31	21	15	12	22	19
15 x Rp⅜" x 15	0882090	-	33	20	11	8	17	24
15 x Rp½" x 15	0881826	-	36	26	15	9	24	24
18 x Rp½" x 18	0882101	-	37	26	14	11	22	27
18 x Rp¾" x 18	0882376	-	42	32	18	16	22	27
22 x Rp½" x 22	0882079	-	37	27	13	12	24	32
22 x Rp¾" x 22	0882081	G	39	28	15	15	24	32

K = Kiwa, G = Gastec approval

S1223 tee branch female nickel-plated

(2x compression x female thread)

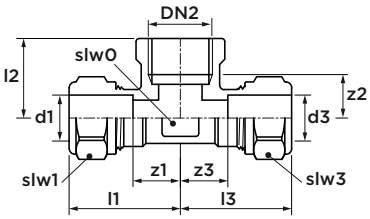

material: brass. Surface finish: nickel-plated

dimension	article no.	K/G	l1	l2	z1/z3	z2	slw0	slw1/slw3
15 x Rp¼" x 15	0875699	G	32	19	10	8	17	24
15 x Rp½" x 15	0875710	G	36	26	15	9	24	24
22 x Rp½" x 22	0875732	G	37	27	13	12	24	32
28 x G½" x 28	0869605	-	38	32	13	17	30	39
28 x G¾" x 28	0869715	-	41	32	16	16	30	39

S1224 tee branch female

(2 x compression x female thread)

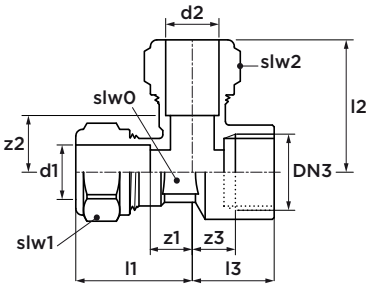

material: brass

dimension	article no.	K/G	l1	l2	l3	z1	z2	z3	slw0	slw1	slw2
15 x 15 x G⅜"	0869814	-	33	35	20	11	14	13	22	24	24
15 x 15 x Rp½"	0869803	K/G	33	37	23	10	14	8	17	24	24
22 x 22 x Rp½"	0869836	K/G	37	39	27	13	16	11	24	32	32
22 x 22 x Rp¾"	0869847	K/G	37	39	33	13	16	16	24	32	32
28 x 28 x G½"	0869880	K	41	44	26	17	20	14	30	39	39

material: DZR

dimension	article no.	K/G	l1	l2	l3	z1	z2	z3	slw0	slw1	slw2
15 x 15 x Rp½"	0881837	G	33	37	28	10	14	8	17	24	24

S1224 tee branch female nickel-plated

(2 x compression x female thread)

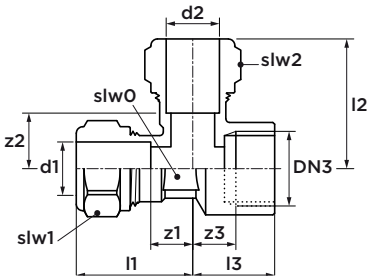

material: brass. Surface finish: nickel-plated

dimension	article no.	K/G	l1	l2	l3	z1	z2	z3	slw0	slw1/ slw2
22 x 22 x Rp½"	0875811	G	37	39	27	13	16	11	24	32

material: DZR. Surface finish: nickel-plated

dimension	article no.	K/G	l1	l2	l3	z1	z2	z3	slw0	slw1/ slw2
15 x 15 x Rp½"	0875798	G	33	37	28	10	14	8	17	24

S1226 tee branch male

(2 x compression x male thread)

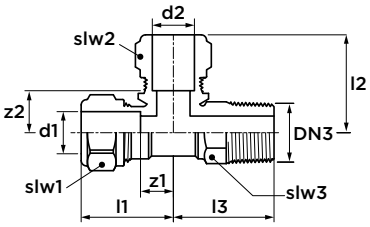

material: brass

dimension	article no.	K/G	l1	l2	l3	z1/z2	slw1/ slw2	slw3
15 x 15 x R½"	0867977	K/G	31	35	36	10	24	19

S1225 tee branch male

(2x compression x male thread)

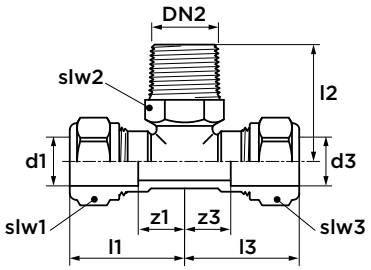

material: brass

dimension	article no.	K/G	l1/l3	l2	z1/z3	slw1/slw3	slw2
15 x R½" x 15	0867988	K/G	35	36	10	24	21
22 x R½" x 22	0871706	K/G	36	41	12	32	19

material: DZR

dimension	article no.	K/G	l1/l3	l2	z1/z3	slw1/slw3	slw2
15 x G½" x 15	0883003	-	35	36	10	24	21

S1227 tee branch male/female

(compression x female thread x male thread)

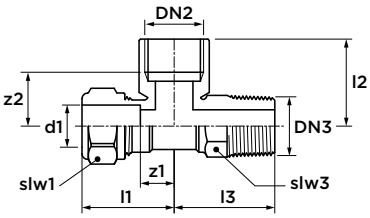

material: brass

dimension	article no.	l1	l2	l3	z1	z2	slw1	slw3
15 x G½" x R½"	0871805	33	31	36	12	16	24	19

S1230 cross
(4 x compression)

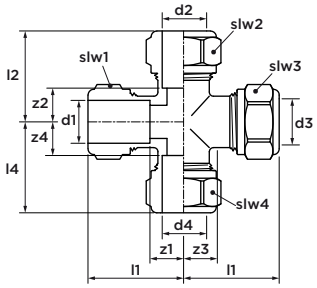

material: brass

Dimension	article no.	K/G	l1/l2/l3/l4	z1/z2/z3/z4	slw1/slw2/slw3/slw4
15	0866008	K	32	10	24
22	0866030	K	37	14	32

S1231 cross reduced nickel-plated
(4 x compression)

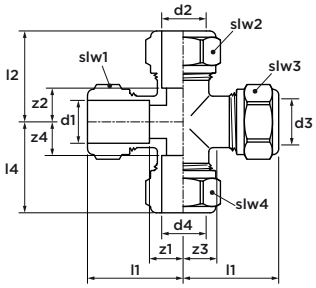

material: brass. Surface finish: nickel-plated

dimension	article no.	l1/l2/l4	l3	z1	z2/z4	z3	slw1	slw2/slw3/ slw4
22 x 15 x 15 x 15	0875930	35	32	11	13	10	32	24

S1231 cross reduced
(4 x compression)

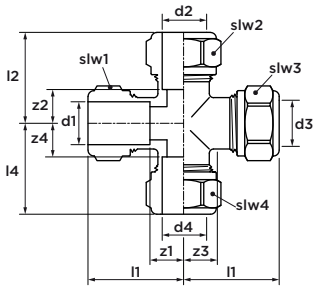

material: brass

dimension	article no.	K/G	l1/l4	l2	l3	z1	z2/ z4	z3	slw1	slw2/ slw4	slw3
22 x 15 x 15 x 15	0866019	K	35	35	32	11	13	10	32	24	24
22 x 15 x 22 x 15	0866021	K	34	36	34	10	13	10	32	24	32

K = Kiwa, G = Gastec approval

S1235 corner tee
(3 x compression)

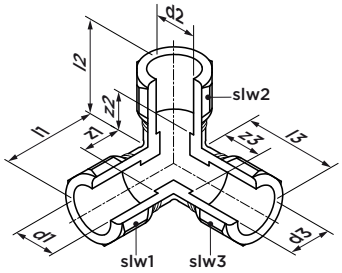

material: brass

dimension	article no.	K/G	l1/l2/l3	z1/z3	z2	slw1/slw2/slw3
15	0871332	K	33	11	10	24
22	0871354	K	37	14	14	32

S1235 corner tee nickel-plated

(3 x compression)

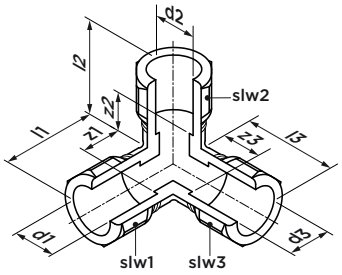

material: brass. Surface finish: nickel-plated

dimension	article no.	l1/l2/l3	z1/z3	z2	slw1/slw2/slw3
15	0875831	33	11	10	24
22	0875853	37	14	14	32

S1236 corner tee reduced nickel-plated

(3 x compression)

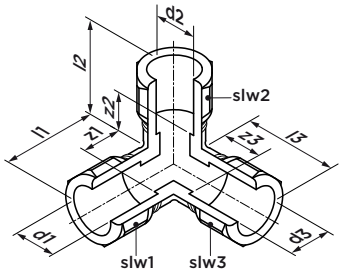

material: brass. Surface finish: nickel-plated

dimension	article no.	l1/l2	l3	z1/z2	z3	slw1	slw2	slw3
22 x 15 x 15	0875897	38	34	16	10	32	24	24
22 x 15 x 22	0875875	38	38	14	16	32	24	32

S1236 corner tee reduced

(3 x compression)

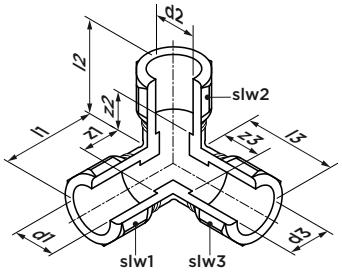

material: brass

dimension	article no.	K/G	l1/l2	l3	z1/z2	z3	slw1	slw2	slw3
22 x 15 x 15	0871365	K	38	34	16	10	32	24	24
22 x 15 x 22	0871343	K	38	38	14	16	32	24	32

S1237 offset tee

(3 x compression)

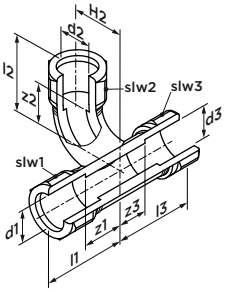

material: brass

dimension	article no.	l1/l3	l2	z1/z3	z2	H2	slw1/slw2/slw3
15	0867955	32	36	11	14	34	24
22	0867999	38	41	15	17	37	32

S1240 wall plate 90°

(compression x female thread)

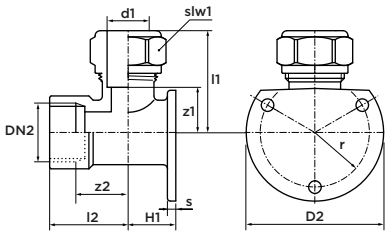

material: brass

dimension	article no.	K/G	l1	l2	z1	z2	H1	D2	s	r	slw1
12 x G½"	0865238	K	35	28	16	14	17	49	3	20	19
15 x G½"	0865007	K	36	28	14	14	17	49	3	20	24
22 x G¾"	0865018	K	41	29	17	12	21	55	4	23	32

material: DZR

dimension	article no.	K/G	l1	l2	z1	z2	H1	D2	s	r	slw1
15 x Rp½"	0881925	G	36	28	14	14	17	49	3	20	24

S1240 wall plate 90° nickel-/chrome-plated

(compression x female thread)

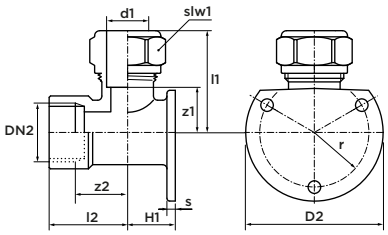

material: brass. Surface finish: nickel-plated

dimension	article no.	l1	l2	z1	z2	H1	D2	s	r	slw1
15 x G½"	0873061	36	28	14	14	17	49	3	20	24

material: DZR. Surface finish: chrome-plated

dimension	article no.	l1	l2	z1	z2	H1	D2	s	r	slw1
12 x Rp½"	0897006	35	28	16	14	17	49	3	20	19
15 x Rp½"	0897017	36	28	14	14	17	49	3	20	24

S1241 straight tap connector with fiber ring

(compression x union nut)

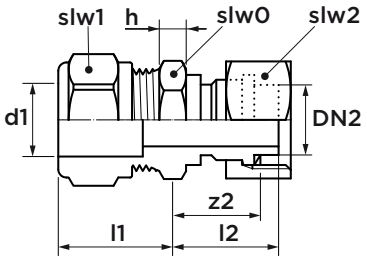

material: brass

dimension	article no.	l1	l2	z2	h	slw0	slw1	slw2
15 x G½"	0874500	22	24	20	6	21	24	24
22 x G¾"	0874522	23	26	21	7	27	32	30

K = Kiwa, G = Gastec approval

S1242 tap connector 90° with fiber ring

(compression x union nut)

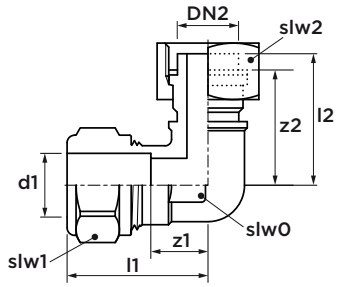

material: brass

dimension	article no.	K/G	l1	l2	z1	z2	D2	slw0	slw1	slw2
15 x G½"	0874533	K	33	31	11	26	14	17	24	24
22 x G¾"	0874544	-	36	35	12	30	20	24	32	30

S1245 tap connector with counter nut

(1 x compression x counter nut)

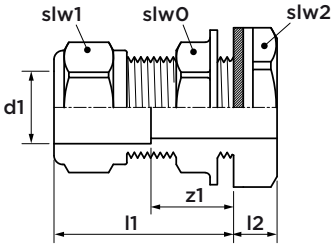

material: brass

dimension	article no.	l1	l2	z1	slw1/slw0	slw2
15	0874566	37	10	15	24	30
22	0874577	38	10	15	32	30

S1250 straight coupling with air vent

(2 x compression)

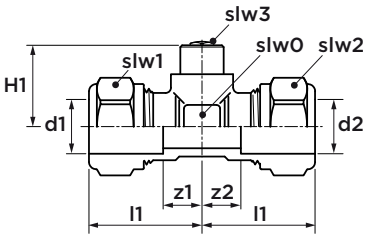

material: brass

dimension	article no.	l1/l2	z1/z2	H1	slw0	slw1/slw2	slw3
15	0860112	31	9	23	17	24	5
22	0860123	32	8	23	24	32	5

S1251 elbow 90° with air vent

(2 x compression)

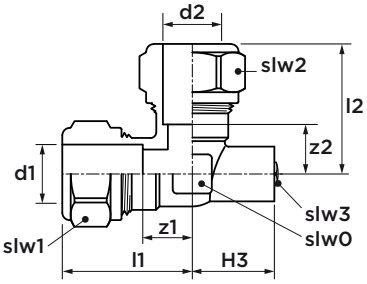

material: brass

dimension	article no.	l1	l2	z1/z2	H3	slw0	slw1/slw2	slw3
15	0863907	33	33	11	27	17	24	5
22	0863951	37	40	15	28	24	32	5

material: brass. Surface finish: nickel-plated

dimension	article no.	l1	l2	z1/z2	H3	slw0	slw1/slw2	slw3
15	0876172	33	33	11	27	17	24	5
22	0876194	37	40	15	28	24	32	5

S1255 straight coupling with drain

(2 x compression)

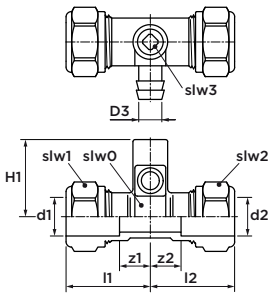

material: brass

dimension	article no.	l1/l2	z1/z2	D3	H1	slw0	slw1/slw2	slw3
15	0860816	32	11	10	31	17	24	5
22	0860827	33	10	10	34	24	32	5

S1256 elbow 90° with drain

(2 x compression)

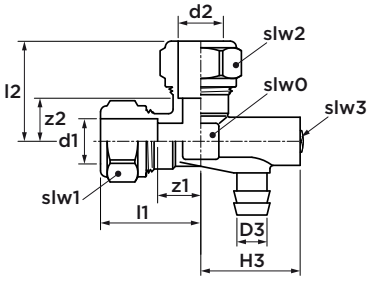

material: brass

dimension	article no.	l1/l2	z1/z2	D3	H3	slw0	slw1/slw2	slw3
15	0863126	33	11	10	33	19	24	5
22	0863137	39	16	10	36	24	32	5

S1257 angle adapter 90° with drain

(compression x male thread)

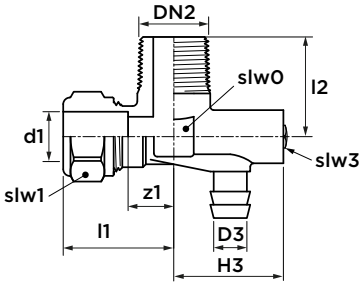

material: brass

dimension	article no.	l1	z1	l2	D3	H3	slw0	slw1	slw3
15 x R½"	0864820	33	11	30	10	33	19	24	5

S1290 angle adapter 90° with needle

(2 x compression)

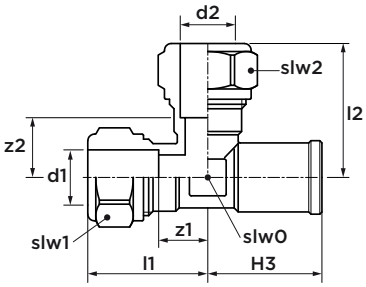

material: brass

dimension	article no.	l1	l2	z1	z2	H3	slw0	slw1 /slw2
15 x R½"	2614953	32	36	10	14	31	17	24

K/G = Kiwa and/or Gastec approval

K1043 coupling with nut and neoprene seal

(compression x union nut)

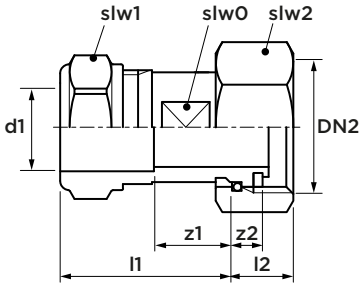

material: brass

dimension	article no.	l1	l2	z1	z2	slw0	slw1	slw2
15 x G¾"	0604340	36	13	14	5	17	24	30
22 x G1"	0604362	46	13	22	5	24	32	37

K2588 coupling with nut

(compression x union nut)

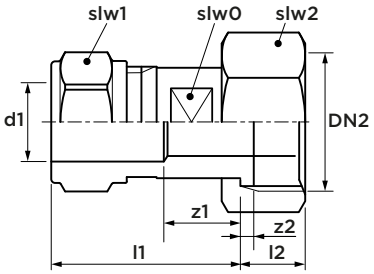

material: brass

dimension	article no.	l1	l2	z1	z2	slw0	slw1	slw2
15 x G¾"	0405680	37	13	15	3	17	24	30

S1259 radiator connector 90°

(compression x male thread)

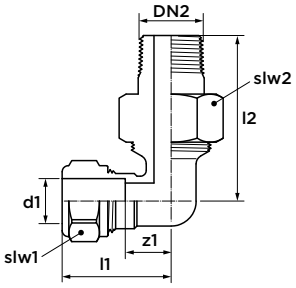

material: brass

dimension	article no.	l1	z1	l2	slw1	slw2
15 x R½"	0864952	36	14	53	24	30

S1268 one piece reducer

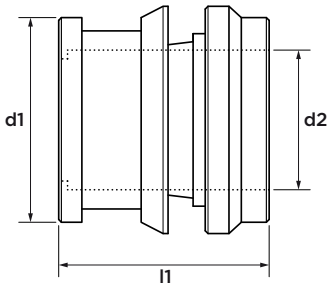

material: brass

dimension	article no.	K/G	l1	d1	d2
12 x 10	0878108	K/G	17	12	10
15 x 10	0878119	K/G	21	15	10
15 x 12	0878121	K/G	21	15	12
22 x 12	0878130	K/G	23	22	12
22 x 15	0878141	K/G	23	22	15
28 x 15	0878152	K/G	23	28	15
28 x 22	0878163	K/G	23	28	22
35 x 22	0878174	K/G	29	35	22
35 x 28	0878185	K/G	29	35	28
42 x 22	0878196	K/G	35	42	22
42 x 28	0878207	K/G	35	42	28
42 x 35	0878218	K/G	35	42	35
54 x 35	0878229	K/G	38	54	35
54 x 42	0878231	K/G	38	54	42

material: DZR

dimension	article no.	K/G	l1	d1	d2
10 x 8	0885071	-	16	10	8
12 x 8	0885082	-	16	12	8
12 x 10	0885093	G	17	12	10
15 x 8	0885104	-	19	15	8
15 x 10	0885115	G	21	15	10
15 x 12	0885126	G	21	15	12
15 x 13	0886787	-	21	15	13
18 x 10	0885247	-	22	18	10
18 x 12	0885137	-	21	18	12
18 x 15	0885148	-	21	18	15
18 x 16	0885159	-	21	18	16
22 x 12	0885161	G	23	22	12
22 x 15	0885170	G	23	22	15
22 x 18	0885181	-	23	22	18
22 x 20	0885931	-	18	22	20
28 x 15	0886017	G	23	28	15
28 x 22	0885192	G	23	28	22
35 x 22	0887139	G	29	35	22
35 x 28	0886028	G	29	35	28
42 x 22	0886039	G	35	42	22
42 x 28	0886041	G	35	42	28
42 x 35	0886050	G	35	42	35
42 x 36	0886061	-	35	42	36
54 x 35	0886094	G	38	54	35
54 x 42	0886105	G	38	54	42

S1271 blanking plug

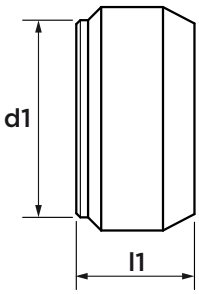

material: brass

dimension	article no.	l1
15	0866932	9
22	0866954	10

material: DZR

dimension	article no.	l1
10	0882123	8
12	0882013	8
15	0882024	9
18	0882035	10
22	0882046	10
28	0882057	11
35	0882068	11
42	0882191	13
54	0882200	13

S1295 cover plate with air vent

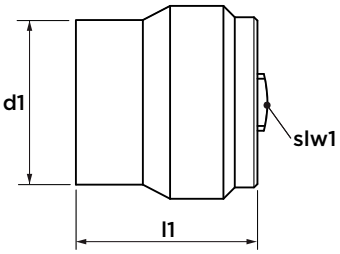

material: brass

dimension	article no.	l1	slw1
15	0879989	16	5

K = Kiwa, G = Gastec approval

S1272 straight connector

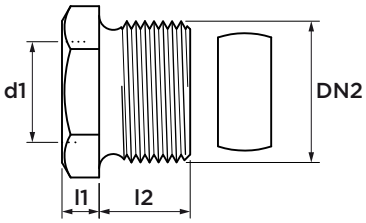

material: brass. Surface finish: nickel-plated

dimension	article no.	l1	l2	slw1
15 x G½"	0879991	6	16	22

S1280 nut

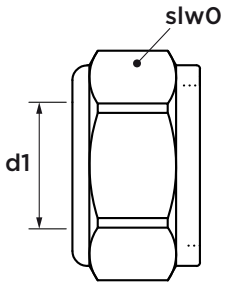

material: brass

dimension	article no.	slw0
6	0869891	13
8	0870001	14
10	0870166	17
12	0870485	19
15	0870034	24
16	0870144	26
18	0870045	27
20	0870155	30
22	0870056	32
28	0870067	39
35	0870078	46
42	0870089	55
54	0870133	70

material: brass. Surface finish: nickel-plated

dimension	article no.	slw0
15	0874236	24
22	0878636	32
28	0878647	39

material: brass. Surface finish: chrome-plated

dimension	article no.	slw0
10	0878680	17
12	0878691	19
18	0878724	27

S1281 compression ring

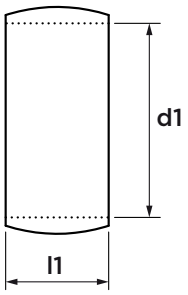

material: brass

dimension	article no.	l1
10	0878009	6
12	0878011	7
15	0878020	8
18	0878031	9
22	0878042	9
28	0878053	10
35	0878064	10
42	0878075	11
54	0878086	11

material: DZR

dimension	article no.	l1
6	0877305	5
8	0881111	5
10	0881122	6
12	0881133	7
15	0881144	8
16	0881001	9
18	0881155	9
20	0877371	9
22	0881166	9
28	0881177	10
35	0881188	10
42	0877415	11
54	0877426	11

S1282 VSH Super Blue compression ring

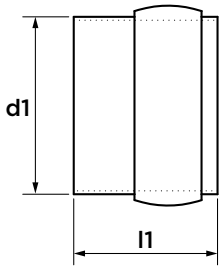

dimension	article no.	l1
⅜" (DN12 - Ø18)	0858495	17
⅜" (DN12 - Ø22)	6320534	17
½" (DN15 - Ø22)	0858539	12
¾" (DN20 - Ø28)	0858541	20
1" (DN25 - Ø35)	0858550	24

S1283 insert stiffener for soft copper tube

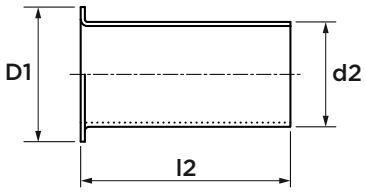

material: koper

dimension	article no.	D1	d2	l2
8 x 0.8	0882411	8	6	19
10 x 0.8	0887117	10	8	19
10 x 1.0	0883223	10	8	19
12 x 1.0	0883234	12	10	23
15 x 1.0	0883245	15	13	23
18 x 1.0	0883278	18	16	25
22 x 1.0	0883291	22	20	27
28 x 1.2	0883300	28	25	32

S1285 insert stiffener for plastic tube

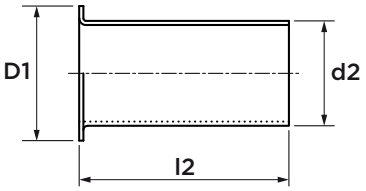

material: brass

dimension	article no.	D1	d2	l2
10 x 1.8	0882519	10	6	19
12 x 2.0	0882521	12	8	21
15 x 2.5	0882530	15	10	22
18 x 2.5	0882541	18	13	24
20 x 2.0	0882552	20	16	25
22 x 3.0	0882563	22	16	26
28 x 4.0	0882574	28	20	27

S5700 open ring spanner

dimension	article no.	material	compatibilty
24 x 32 mm	0890001	chromed steel	for union nuts 15 and 22 mm

SD1200 action box straight coupling

(2 x compression)

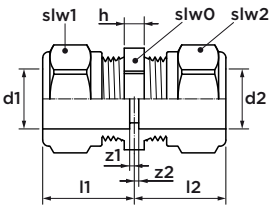

material: brass

dimension	article no.	K/G	l1/l2	z1/z2	h	slw0	slw1/slw2
12	0889482	K/G	21	2	5	17	19
15	0889207	K/G	23	2	6	22	24
22	0889218	K/G	26	3	7	30	32

K = Kiwa, G = Gastec approval

SD1201 action box reduced coupling

(2 x compression)

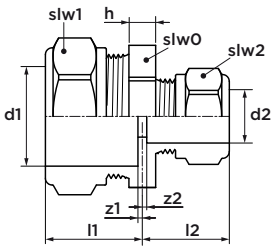

material: brass

dimension	article no.	K/G	l1	l2	z1	z2	h	slw0	slw1	slw2
15 x 12	0889504	K/G	24	21	2	2	6	22	24	19
22 x 15	0889229	K/G	25	24	2	2	7	30	32	24

SD1202 action box straight connector
(compression x male thread)

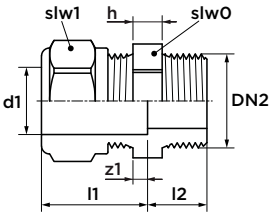

material: brass

dimension	article no.	K/G	l1	l2	h	slw0	slw1
12 x G⅜"	0889493	K	19	18	6	17	19
15 x R⅜"	0889231	K/G	22	18	7	21	24
15 x R½"	0889240	K/G	22	23	7	21	24
22 x R¾"	0889251	K/G	23	23	7	30	32

SD1204 action box straight connector
(compression x female thread)

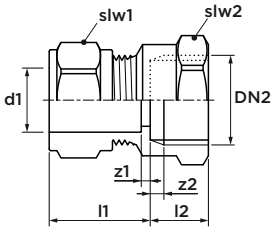

material: brass

dimension	article no.	K/G	l1	l2	z1	z2	slw1	slw2
15 x Rp½"	0889262	K/G	24	19	2	4	24	27
22 x Rp¾"	0889273	K/G	25	20	2	4	32	32

SD1206 action box stop end
(1 x compression)

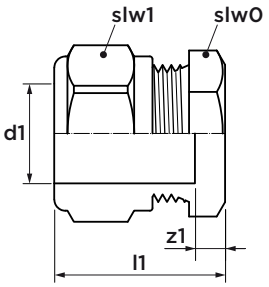

material: brass

dimension	article no.	K/G	l1	z1	slw0	slw1
12	0889453	K/G	23	4	17	19
15	0889284	K/G	27	5	21	24
22	0889295	K/G	29	6	30	32

SD1210 action box elbow 90°
(2 x compression)

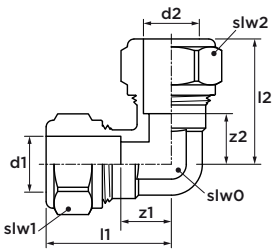

material: brass

dimension	article no.	K/G	l1/l2	z1/z2	slw0	slw1/slw2
12	0889471	K/G	29	10	14	19
15	0889306	K/G	33	11	17	24
22	0889317	K/G	38	15	24	32

SD1211 action box reduced angle adapter 90°

(2 x compression)

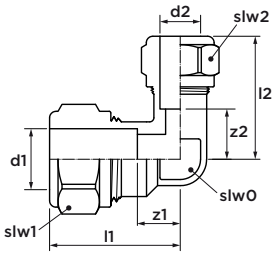

material: brass

dimension	article no.	K/G	l1	l2	z1	z2	slw0	slw1	slw2
15 x 12	0889515	K/G	31	30	9	11	14	24	19
22 x 15	0889328	K/G	36	39	11	15	17	32	24

SD1212 action box angle adapter 90°

(compression x male thread)

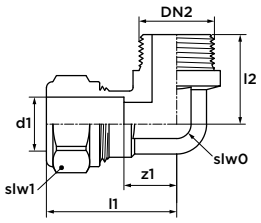

material: brass

dimension	article no.	K/G	l1	z1	l2	slw0	slw1
12 x R⅜"	0889460	K/G	29	11	27	14	19
15 x G⅜"	0889339	K	36	14	25	17	24
15 x R½"	0889341	K/G	33	11	35	18	24
22 x R¾"	0889350	K/G	38	14	42	24	32

SD1214 action box angle adapter 90°

(compression x female thread)

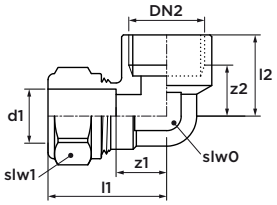

material: brass

dimension	article no.	K/G	l1	l2	z1	z2	slw0	slw1
15 x Rp½"	0889361	K/G	37	28	15	13	17	24

K = Kiwa, G = Gastec approval

SD1220 action box tee

(3 x compression)

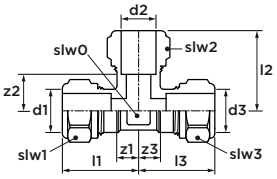

material: brass

dimension	article no.	K/G	l1/l3	l2	z1/z3	z2	slw0	slw1/slw2/slw3
12	0889526	K/G	30	32	9	9	14	19
15	0889372	K/G	32	35	10	12	17	24
22	0889383	K/G	37	40	13	16	24	32

SD1221 action box reduced tee

(3 x compression)

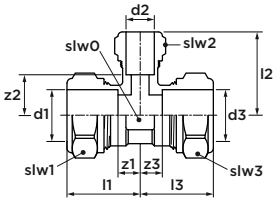

material: brass

dimension	article no.	K/G	l1	l2	l3	z1	z2	z3	slw0	slw1	slw2	slw3
22 x 15 x 15	0889416	K/G	34	38	34	10	14	11	24	32	24	24
22 x 15 x 22	0889394	K/G	34	38	34	9	16	9	24	32	24	32
22 x 22 x 15	0889405	K/G	37	40	39	15	15	16	24	32	32	24

SD1223 action box tee branch female

(2 x compression x female thread)

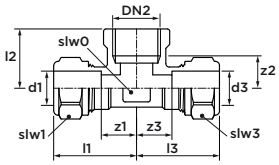

material: brass

dimension	article no.	K/G	l1/l3	l2	z1/z3	z2	slw0	slw1/slw3
15 x Rp½" x 15	0889427	K/G	36	26	15	9	24	24
22 x Rp½" x 22	0889438	K/G	37	27	13	12	24	32

SD1240 action box wall plate 90°

(compression x female thread)

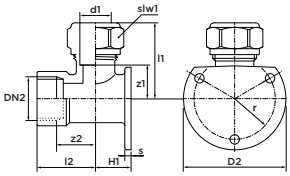

material: brass

dimension	article no.	K/G	l1	l2	z1	z2	H1	D2	s	r	slw1
15 x G½"	0889449	K	36	28	14	14	17	49	3	20	24

SD1299 action box mix

material: brass

dimension	article no.	content	article no.
12-22	0897996	5x straight coupling FF 12	0860200
		5x straight coupling FF 15	0860301
		5x straight coupling FF 22	0860508
		5x straight connector FM 12 x G⅜"	0861300
		5x stop end F 12	0861124
		5x stop end F 15	0861135
		5x elbow 90° FF 15	0863302
		5x elbow 90° FF 22	0863500
		5x angle adapter 90° FM 12 x R⅜"	0862169
		2x tank connector FF 15 x G½"	0874533
		5x tee FFF 15	0867053

VSH Super

Multi Super & MPI

K3055 Multi Super compression set

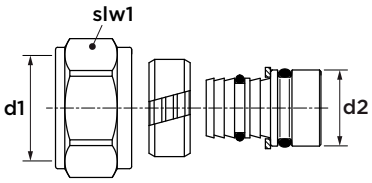

material: DZR/brass

dimension	article no.	slw1
15 x 14	0892001	24
15 x 16	0892100	24
22 x 20	0891000	32
22 x 25	0891011	39
22 x 26	0891022	39
28 x 25	0891033	39
28 x 26	0891044	39

K3056 straight coupling

(2 x multi super compression)

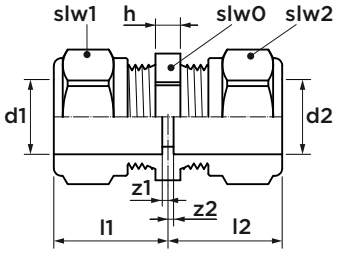

material: DZR/brass

dimension	article no.	l1/l2	z1/z2	h	slw0	slw1/slw2
14	0892012	25	8	6	22	24
16	0892111	25	12	6	22	24
20	0891055	33	17	7	30	32

K3057 straight connector

(multi super compression x compression)

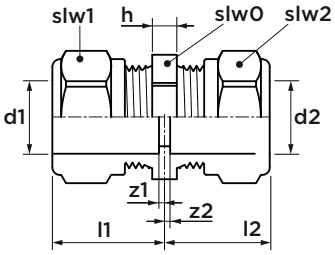

material: DZR/brass

dimension	article no.	l1	l2	z1	z2	h	slw0	slw1	slw2
14 x 15	0892023	23	25	8	1	6	22	24	24
16 x 15	0892122	23	25	12	1	6	22	24	24
20 x 22	0891099	33	26	17	2	7	30	32	32
25 x 22	0891101	35	26	16	3	7	36	39	32
26 x 22	0891110	35	26	16	3	7	36	39	32

K3058 straight connector

(1 x multi super compression x male thread)

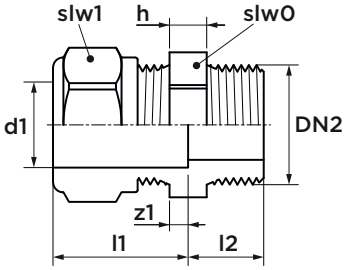

material: DZR/brass

dimension	article no.	l1	l2	z1	h	slw0	slw1
14 x R½"	0892034	24	23	0	7	22	24
16 x R½"	0892133	24	23	0	7	22	24
20 x R½"	0891209	31	20	0	7	30	32
20 x R¾"	0891211	31	23	0	7	30	32

K3059 tee

(3 x multi super compression)

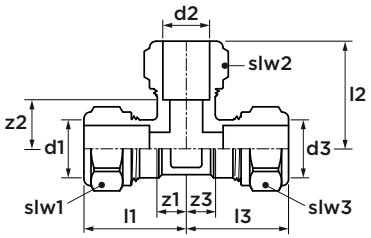

material: DZR/brass

dimension	article no.	l1/l3	l2	z1/z3	z2	slw1/slw2/slw3
16	0892144	34	36	21	23	24
20	0891431	44	47	28	30	32
25	0891440	48	52	29	33	39
26	0891451	48	51	29	33	39

K3062 elbow 90°

(2 x multi super compression)

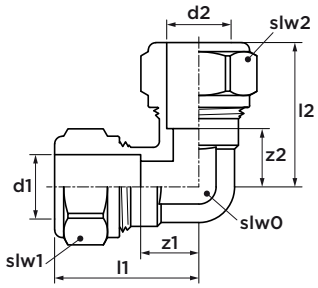

material: DZR/brass

dimension	article no.	l1/l2	z1/z2	slw0	slw1/slw2
16	0892155	35	22	17	24
20	0891321	46	29	17	32
25	0891330	50	31	24	39

K3065 stop end

(1 x multi super compression)

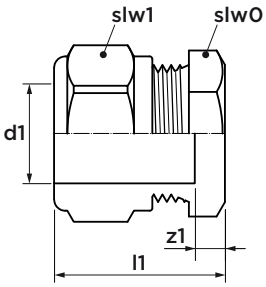

material: DZR/brass

dimension	article no.	l1	z1	slw0	slw1
14	0892089	28	11	22	24
16	0892188	28	15	22	24
20	0891627	37	20	30	32

K3066 straight connector

(multi super compression x female thread)

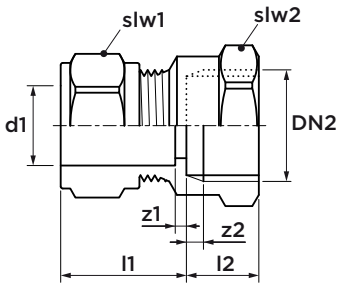

material: DZR/brass

dimension	article no.	l1	l2	z1	z2	slw1	slw2
14 x Rp½"	0892091	26	19	9	4	24	27
16 x Rp½"	0892199	26	19	13	4	24	27
20 x Rp½"	0891264	31	16	15	0	32	30
25 x Rp¾"	0891286	32	22	13	6	39	36
25 x Rp1"	0891308	34	23	15	4	39	41
26 x Rp¾"	0891297	32	22	13	6	39	36
26 x Rp1"	0891319	34	23	15	4	39	41

K3072 angle adapter 90°

(1 x multi super compression x male)

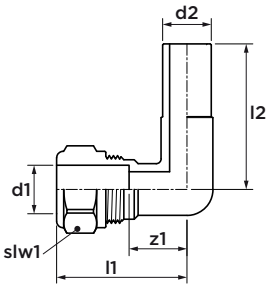

material: DZR/brass

dimension	article no.	l1	l2	z1	slw1
16 x 15	0891418	42	45	29	24
20 x 22	0891429	44	41	27	32

K3073 tee reduced

(3 x multi super compression)

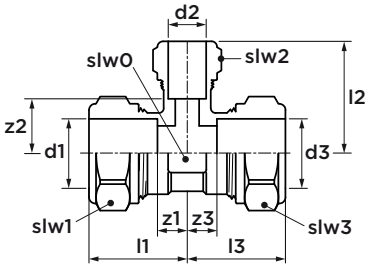

material: DZR/brass

dimension	article no.	l1	l2	l3	z1/z3	z2	slw0	slw1	slw2/slw3
26 x 20 x 20	0891541	46	48	45	28	32	30	39	32

K3067 MPI set

(insert + nut)

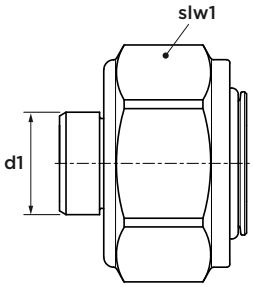

material: DZR/brass

dimension	article no.	surface treatment	slw1
15	6340433		24
15	6340444	Cr	24
16	6340455		24
16	6340466	Cr	24
18	6340477		27
20	6340488		32
22	6340499		32
M22 x 16	6340501	Cr	25
M22 x 20	6340510	Cr	32

K3068 manifold

(compression/MPI)

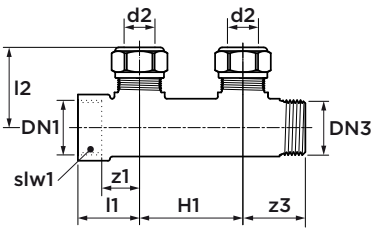

material: DZR

dimension	article no.	l1	l2	z1	z3	H1	slw1
2 x 15 x G¾" x G¾"	0883850	30	39	18	30	50	32
3 x 15 x G¾" x G¾"	0883861	30	39	18	32	50	32

K5701 calibration and debur tool

dimension	article no.
14	3850704

K5700 calibration tool

dimension	article no.
16-26 mm	3850000

VSH Super

Gas Belgium

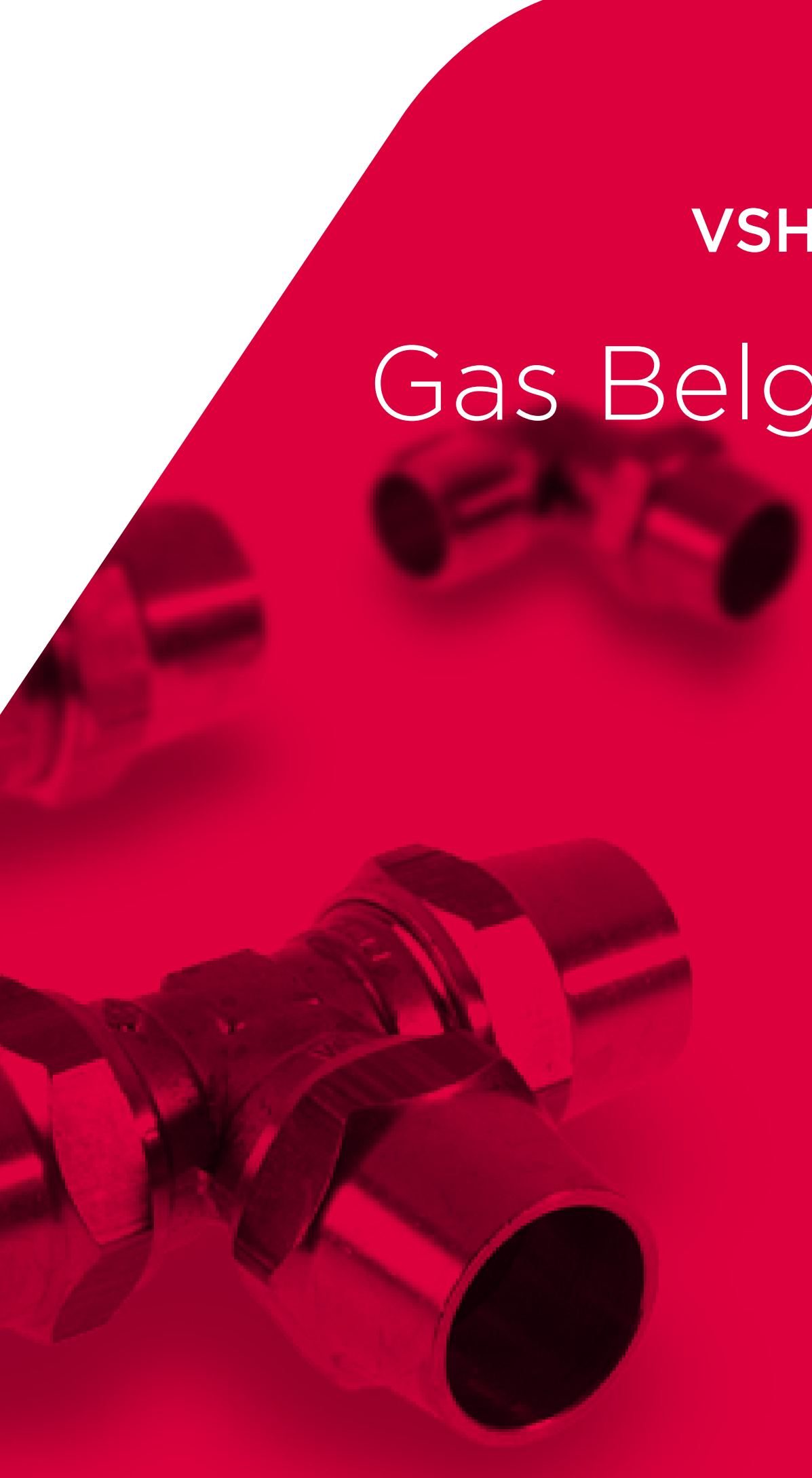

G1200 straight coupling
(2 x compression)

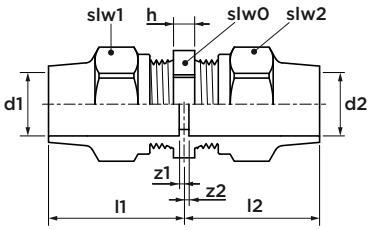

material: brass

dimension	article no.	l1/l2	z1/z2	h	slw0	slw1/slw2
12	0879208	29	2	5	17	21
15	0879219	33	2	5	22	24
18	0865997	37	2	6	27	27
22	0879221	41	3	7	30	32
28	0879230	46	4	8	36	39

G1202 straight connector
(compression x male thread)

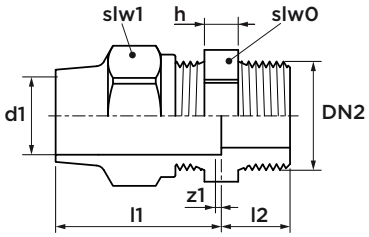

material: brass

dimension	article no.	l1	l2	z1	h	slw1	slw2
12 x R⅜"	0879538	27	18	0	6	21	17
12 x R½"	0879351	27	20	0	7	21	22
15 x R⅜"	0879252	31	18	0	7	24	22
15 x R½"	0879362	31	23	0	7	24	22
15 x R¾"	0879065	31	22	0	6	24	27
18 x R½"	0876810	35	23	0	7	27	24
18 x R¾"	0879098	34	23	0	6	27	27
22 x R¾"	0879373	38	23	0	7	32	30
22 x R1"	0879384	38	28	0	8	32	36
28 x R1"	0879395	42	29	0	8	39	36

G1201 reducer
(2 x compression)

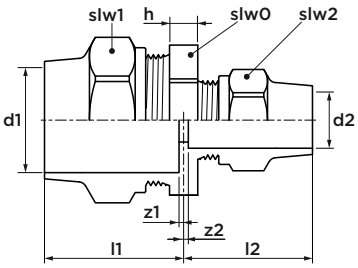

material: brass

dimension	article no.	l1	l2	z1	z2	h	slw0	slw1	slw2
22 x 15	0879263	40	34	2	2	6	30	32	24
28 x 22	0879274	45	40	3	3	7	36	39	32

G1204 straight connector
(compression x female thread)

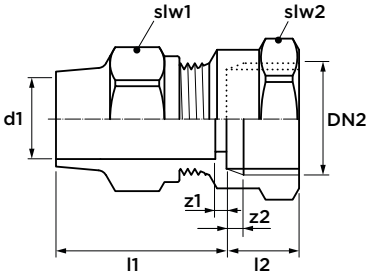

material: brass

dimension	article no.	l1	l2	z1	z2	slw1	slw2
12 x Rp½"	0879307	30	19	3	4	21	27
15 x Rp½"	0879318	33	19	2	4	24	27
15 x Rp¾"	0879109	35	20	4	4	24	32
18 x Rp½"	0876821	37	19	2	4	27	27
18 x Rp¾"	0879549	37	20	2	4	27	32
22 x Rp¾"	0879329	40	20	2	4	32	32
22 x Rp1"	0879331	43	23	4	4	32	41
28 x Rp1"	0879340	44	23	2	4	39	41

G1210 elbow 90°

(2 x compression)

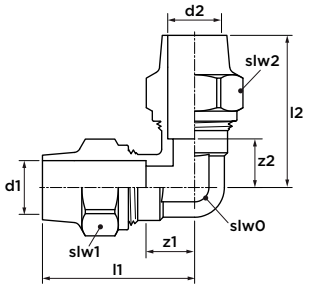

material: brass

dimension	article no.	l1/l2	z1/z2	slw0	slw1/slw2
12	0879406	37	10	14	21
15	0879417	42	11	17	24
18	0876667	38	13	22	27
22	0879428	53	15	24	32
28	0879439	60	18	30	39

G1211 angle adapter reduced 90°

(2 x compression)

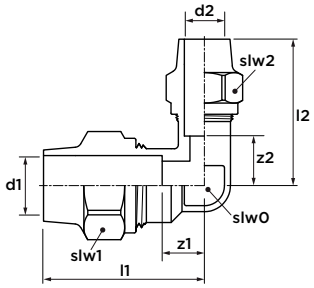

material: brass

dimension	article no.	l1	l2	z1	z2	slw0	slw1	slw2
22 x 15	0879615	49	46	11	15	17	32	24
28 x 22	0879626	57	56	15	18	24	39	32

G1212 angle adapter 90°

(compression x male thread)

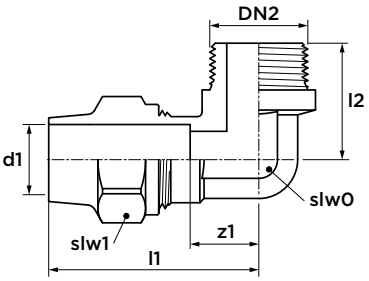

material: brass

dimension	article no.	l1	z1	l2	slw0	slw1
12 x R⅜"	0879001	38	11	27	14	21
15 x R½"	0879516	42	11	35	18	24
18 x R½"	0876678	45	11	36	18	27
18 x R¾"	0879111	49	14	37	24	27
22 x R¾"	0879527	52	14	42	24	32
28 x R1"	0879285	63	21	48	30	39

G1214 angle adapter 90°

(compression x female thread

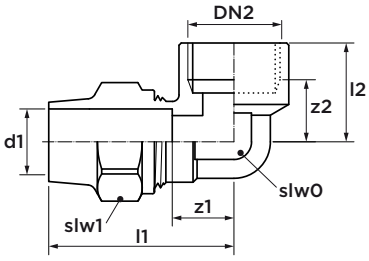

material: brass

dimension	article no.	l1	l2	z1	z2	slw0	slw1
12 x Rp½"	0879142	43	28	16	13	14	21
15 x Rp½"	0879560	46	23	15	14	17	24
18 x Rp½"	0876656	50	29	15	14	22	27
22 x Rp¾"	0879571	56	33	18	16	24	32
22 x Rp1"	0879582	59	38	21	19	24	32
28 x Rp1"	0879043	63	34	21	15	30	39

G1220 tee
(3 x compression)

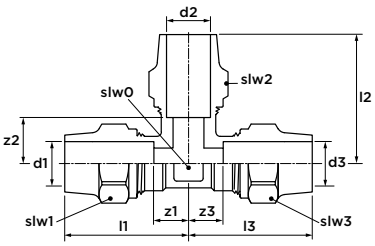

material: brass

dimension	article no.	l1/l3	l2	z1/z3	z2	slw0	slw2	slw1/slw3
12	0879648	36	36	9	9	14	21	21
15	0879659	41	43	10	12	17	24	24
18	0876689	47	47	12	12	22	27	27
22	0879661	51	54	13	16	24	32	32
28	0879670	58	62	16	20	30	39	39

G1221 tee reduced
(3 x compression)

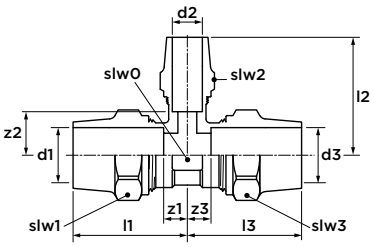

material: brass

dimension	article no.	l1/l3	l2	z1/z3	z2	slw0	slw1/slw3	slw2
22 x 15 x 22	0879681	47	47	9	16	24	32	24
28 x 15 x 28	0879725	52	51	10	20	30	39	24

G1223 tee branch female
(2 x compression x female thread)

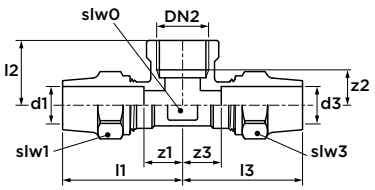

material: brass

dimension	article no.	l1/l3	l2	z1/z3	z2	slw0	slw1/slw3
15 x Rp½" x 15	0879813	46	26	15	9	24	24
22 x Rp½" x 22	0879824	51	27	13	12	24	32

G1280 union nut

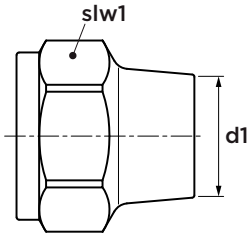

material: brass

dimension	article no.	slw1
12	0879835	21
15	0879846	24
18	0879857	27
22	0879868	32
28	0879879	39

G1281 compression ring

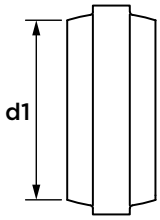

material: brass

dimension	article no.
12	0879450
15	0879461
18	0879472
22	0879483
28	0879494

VSH Super

valves

K2330 VSH Super ball valve PN10

(2 x compression)

specifications

- maximum operating temperature 65°C
- VSH Super compression connection suitable for carbon, stainless and copper tube
- Kiwa approval
- smooth operation
- clear open-close position
- demountable handle

no.	component	material
1	body	brass (CW617N)
2	compression end	brass (CW617N)
3	compression ring	brass (CW603N)
4	ball	brass (CW617N), chrome plated
5	ball seat	PTFE
6	stem	brass (CW617N)
7	stem o-ring	EPDM
8	handle	PVC insulated stainless steel

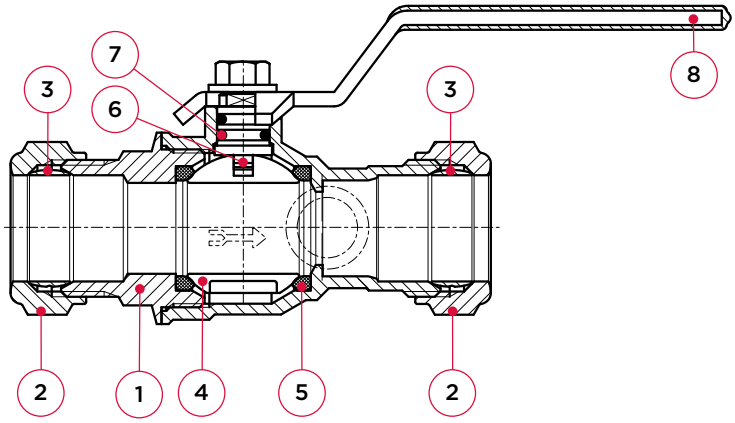

maximum pressure [bar]		
operating pressure	test pressure body	test pressure seat
10	15	11

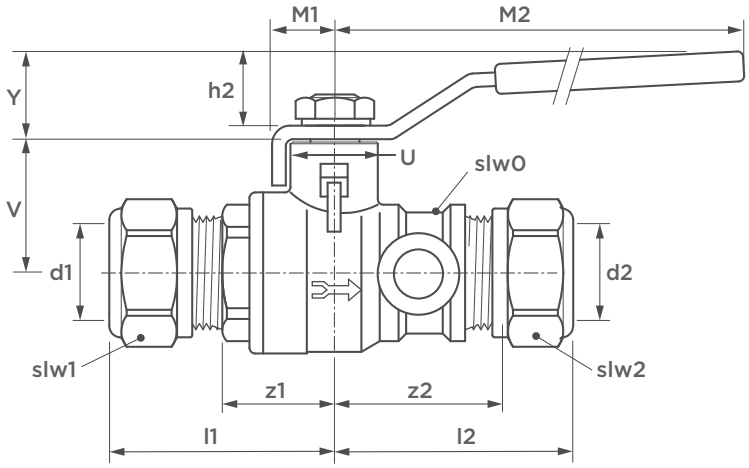

dimension	article no.	weight [kg]	Kvs [m³/h]	l1	l2	z1	z2	slw0	slw1/slw2	h2	V	Y	M1	M2	U
15 (DN15R)	0504053	0.28	6.1	44	45	22	23	26	24	19	23	22	14	103	16
22 (DN20R)	0504119	0.45	11	49	51	25	37	30	32	19	26	22	14	103	16

K2341 VSH Super ball valve with drain PN10

(2 x compression)

specifications

- maximum operating temperature 65°C
- VSH Super compression connection suitable for carbon, stainless and copper tube
- Kiwa approval
- smooth operation
- clear open-close position
- demountable handle
- rotatable drain

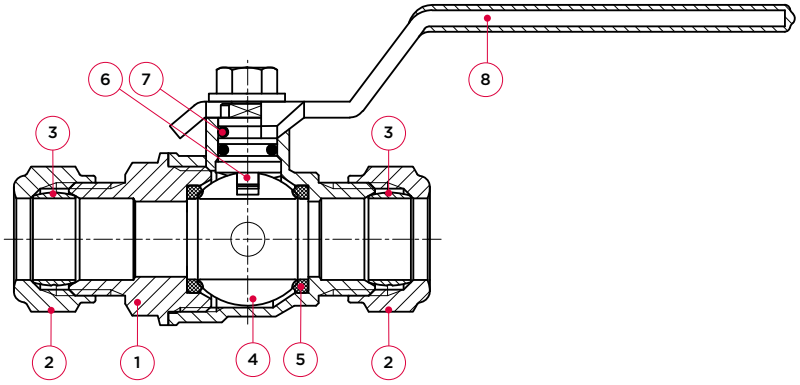

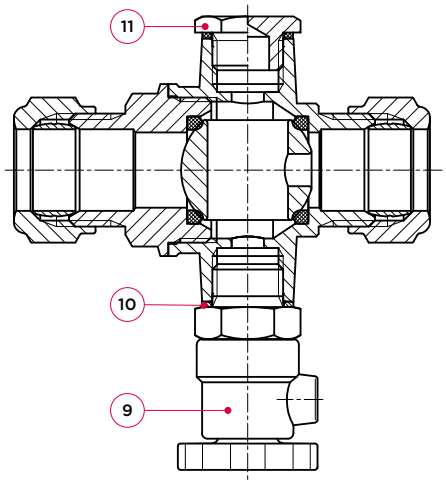

no.	component	material
1	body	brass (CW617N)
2	compression nut	brass (CW617N)
3	compression ring	brass (CW603N)
4	ball	brass (CW617N), chrome plated
5	ball seat	PTFE
6	stem	brass (CW617N)
7	stem o-ring	EPDM
8	handle	PVC insulated stainless steel
9	drain valve	brass (CW617N), plastic (POM)
10	drain valve seal	fiber ring
11	plug	brass (CW617N) with fiber ring

maximum pressure [bar]

operating pressure	test pressure body	test pressure seat
10	15	11

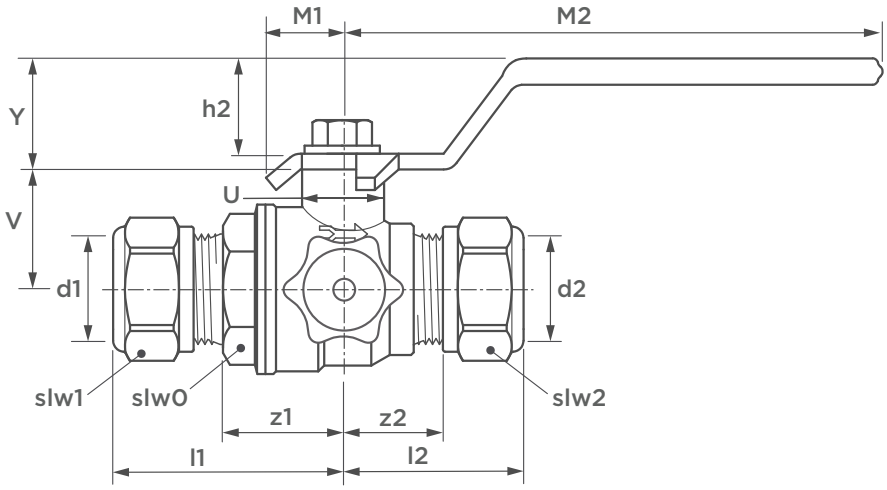

dimension	article no.	weight [kg]	Kvs [m³/h]	l1	l2	z1	z2	slw0	slw1/slw2	h2	V	Y	M1	M2	U
15 (DN15R)	0504702	0.32	6.1	44	34	22	14	26	24	19	23	22	14	103	16
22 (DN20R)	0504713	0.45	11	50	39	26	15	30	32	19	26	22	14	103	16
28 (DN25)	0504724	0.66	20	55	42	31	18	37	39	19	33	22	14	125	16

K2340 VSH Super ball valve with drain PN10

(2 x compression)

specifications

- maximum operating temperature 65°C
- VSH Super compression connection suitable for carbon, stainless and copper tube
- Kiwa approval
- smooth operation
- clear open-close position
- demountable handle
- rotatable drain

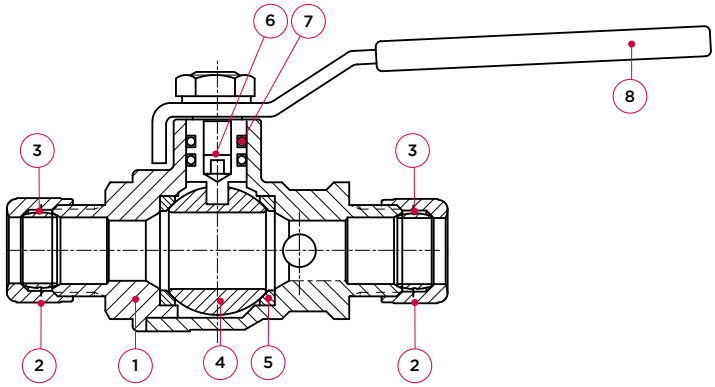

no.	component	material
1	body	brass (CW617N)
2	compression nut	brass (CW617N)
3	compression ring	brass (CW603N)
4	ball	brass (CW617N), chrome plated
5	ball seat	PTFE
6	stem	brass (CW617N)
7	stem o-ring	EPDM
8	handle	PVC insulated stainless steel
9	drain valve	brass (CW617N), plastic (POM)
10	drain valve seal	fiber ring
11	plug	brass (CW617N) with fiber ring

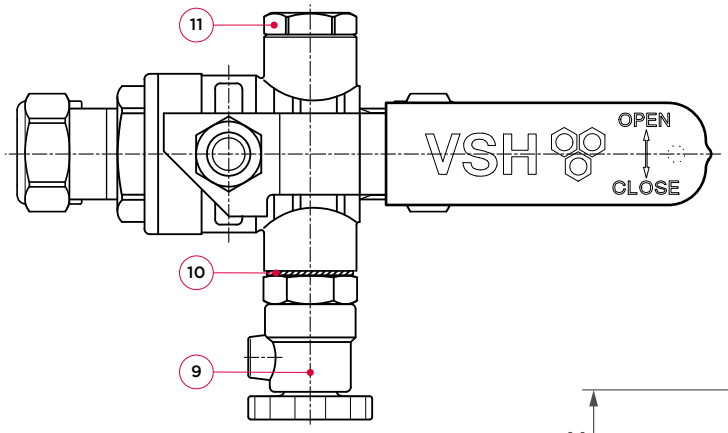

maximum pressure [bar]

operating pressure	test pressure body	test pressure seat
10	15	11

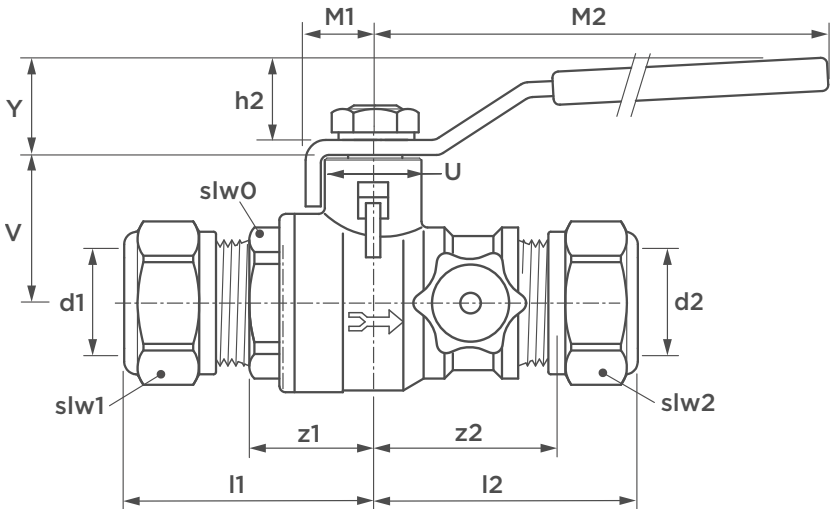

dimension	article no.	weight [kg]	Kvs [m³/h]	l1	l2	z1	z2	slw0	slw1/slw2	h2	V	Y	M1	M2	U
12 (DN15R)	0504889	0.29	3.9	40	45	21	26	26	19	19	23	22	14	103	16
22 (DN20R)	0504405	0.61	11	49	51	25	27	30	32	19	26	22	14	103	16
28 (DN25)	0504680	0.79	20	55	60	31	36	37	39	19	33	22	14	125	16

K2331 VSH Super EA protect ball valve with check valve, with drain PN10

(2 x compression)

specifications

- maximum operating temperature 65°C
- VSH Super compression connection suitable for carbon, stainless and copper tube
- Kiwa approval
- smooth operation
- clear open-close position
- demountable handle
- check valve EA (EN 1717), suitable for class 1 and 2 liquids according WB 3.8
- rotatable drain

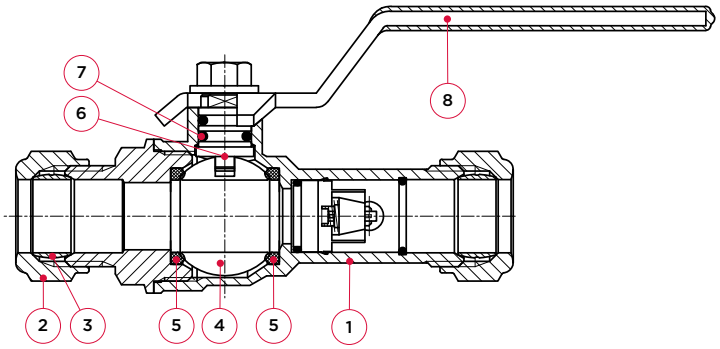

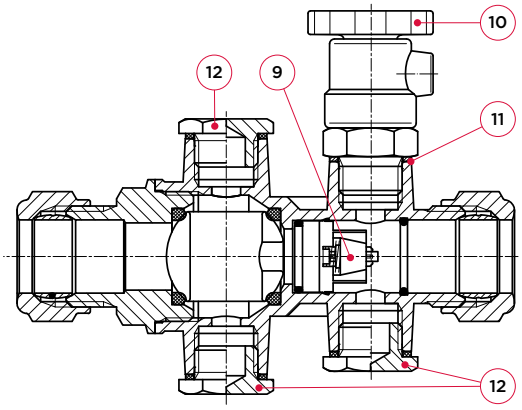

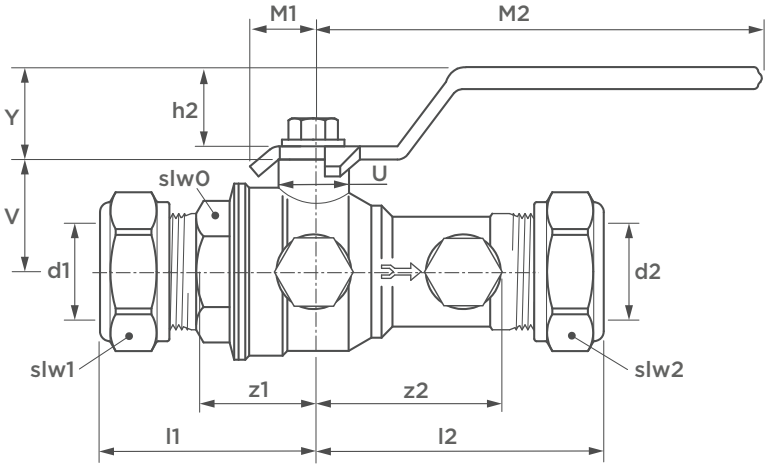

no.	component	material
1	body	brass (CW617N)
2	compression end	brass (CW617N)
3	compression ring	brass (CW603N)
4	ball	brass (CW617N), chrome plated
5	ball seat	PTFE
6	stem	brass (CW617N)
7	stem o-ring	EPDM
8	handle	PVC insulated stainless steel
9	check valve	plastic
10	drain valve	brass (CW617N), plastic (POM)
11	drain valve seal	fiber ring
12	plug	brass (CW617N) with fiber ring

maximum pressure [bar]

operating pressure	test pressure body	test pressure seat
10	15	11

dimension	article no.	weight [kg]	Kvs [m³/h]	l1	l2	z1	z2	slw0	slw1/slw2	h2	V	Y	M1	M2	U
15 (DN15R)	0504185	0.42	4	43	60	21	38	26	24	19	23	22	14	103	16
20 (DN20R)	0504196	0.56	7.6	49	65	25	41	30	32	19	26	22	14	103	16
28 (DN25)	0504207	0.83	15.1	55	75	31	51	37	39	19	33	22	14	125	16

K2590 VSH Super angle seat stop valve

(2 x compression)

specifications

- maximum operating pressure 10 bar
- maximum operating temperature 65°C
- VSH Super compression connection suitable for carbon, stainless and copper tube
- maximum operational temperature 90°C with special HT cartridge
- Kiwa approval
- smooth operation
- fully rotational

no.	component	material
1	body	brass (CW617N)
2	compression nut	brass (CW617N)
3	compression ring	brass (CW603N)
4	disc	brass (CW617N)
5	disc seal	EPDM or PTFE (HT-application)
6	stem	brass (CW617N)
7	cartridge seal	fiber ring
8	handle	plastic (PA6, 30% GF)

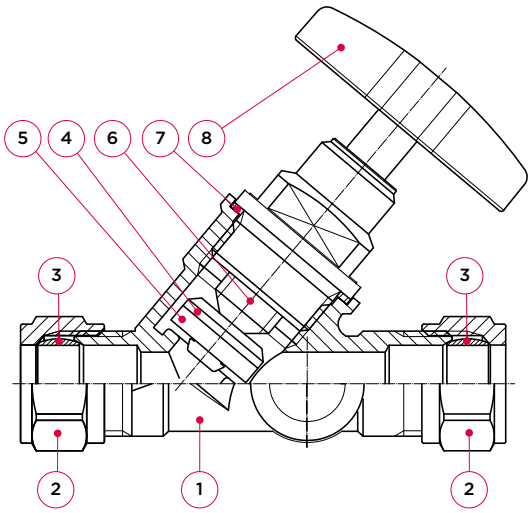

maximum pressure [bar]		
operating pressure	test pressure body	test pressure seat
10	15	11

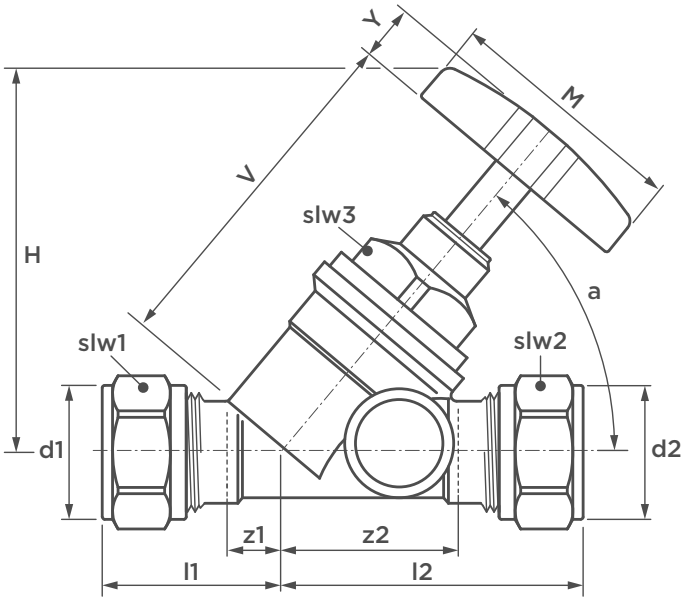

dimension	article no.	weight [kg]	Kvs [m³/h]	l1	l2	z1	z2	slw1/slw2	slw3	H	V	Y	M	a [°]	U
12 (DN12)	0498146	0.22	1.9	25	51	7	33	19	19	60	53	10	43	50	22

K2592 VSH Super angle seat stop valve with drain connection

(2 x compression)

specifications

- maximum operating pressure 10 bar
- maximum operating temperature 65°C
- maximum operational temperature 90°C with special HT cartridge
- VSH Super compression connection suitable for carbon, stainless and copper tube
- Kiwa approval
- smooth operation
- fully rotational
- drain connection

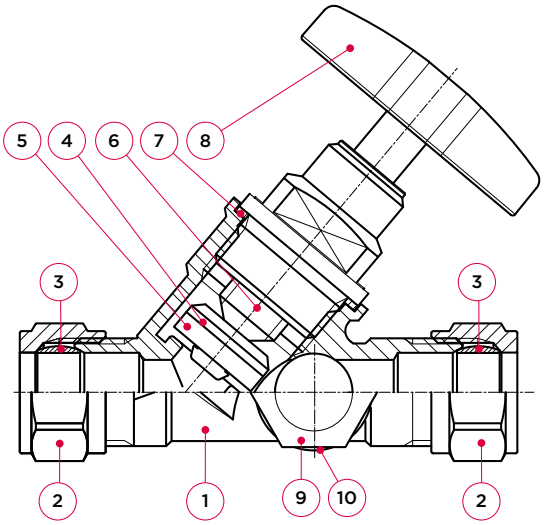

no.	component	material
1	body	brass (CW617N)
2	compression nut	brass (CW617N)
3	compression ring	brass (CW603N)
4	disc	brass (CW617N)
5	disc seal	EPDM or PTFE (HT-application)
6	stem	brass (CW617N)
7	cartridge seal	fiber ring
8	handle	plastic (PA6, 30% GF)
9	plug	brass (CW617N)
10	plug seal	fiber ring

maximum pressure [bar]

operating pressure	test pressure body	test pressure seat
10	15	11

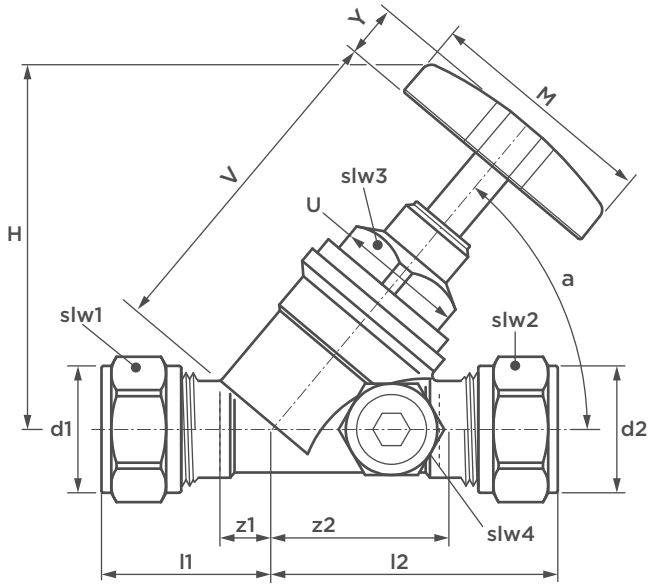

dimension	article no.	weight [kg]	Kvs [m³/h]	l1	l2	z1	z2	slw1/slw2	slw3	slw4	H	V	Y	M	a [°]	U
12 (DN12)	0498234	0.18	1.9	25	51	8	28	19	19	17	53	53	10	43	50	22
15 (DN15)	0498245	0.26	3	30	55	8	33	24	19	17	53	63	10	43	50	24
22 (DN20)	0498256	0.42	7	34	63	11	40	32	19	17	41	73	12	60	50	24
28 (DN25)	0498267	0.61	10	39	75	16	52	39	19	17	40	92	12	60	50	24

K2550 upper part for stop valve

(with fiber ring)

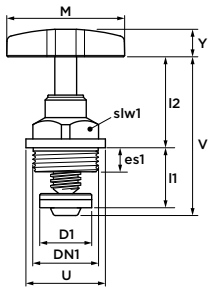

dimension	article no.	DN1	D1	es1	l1	l2	V	Y	U	M	slw1
12 (DN10)	0410113	M20 x 1.5	16	9	23	25	49	10	24	43	19
15 (DN12)	0410124	M24 x 1.5	19	9	18	34	55	10	29	43	19
22 (DN20)	0410135	M30 x 1.5	25	9	36	52	93	12	36	60	19
28 (DN25)	0410146	M36 x 1.5	31	11	30	64	99	12	42	60	19
35 (DN32)	0409046	G1⅜	39	16	35	51	103	18	52	75	27
42 (DN40)	0409057	G1¾	47	16	32	60	109	18	62	75	27
54 (DN50)	0409068	G2¼	58	19	39	65	121	18	74	75	27
15 HT (DN12)	0496969	M24 x 1.5	19	9	18	34	55	10	29	43	19
22 HT (DN20)	0496971	M30 x 1.5	25	9	36	52	93	12	36	60	19
28 HT (DN25)	0496980	M36 x 1.5	31	11	30	64	99	12	42	60	19

K2545 drain plug

(male thread)

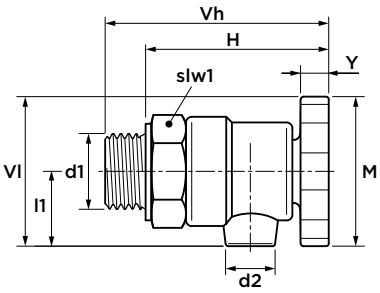

dimension	article no.	d2	l1	Vh	Vl	H	Y	M	slw1
G¼" (DN8)	0497937	9	13	38	26	31	5	26	17

remark: rotatable drain with fiber ring maximum operating temperature 65°C

K2546 drain stop with fiber ring

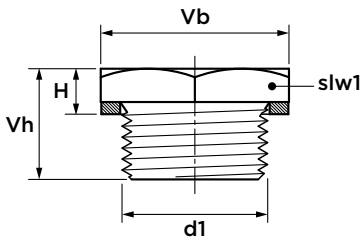

dimension	article no.	Vh	Vb	H	slw1
G¼" (DN8)	0494021	10	17	4	17

K2595 angle stop valve

(compression x union connection)

specifications

- max. operating temperature 65°C
- smooth operation
- Kiwa approval
- VSH Super compression connection

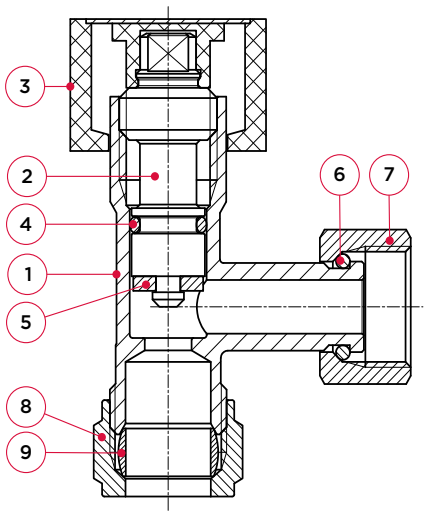

no.	component	material
1	body	brass (CW617N), chrome-plated
2	stem	brass (CW617N)
3	handle	plastic, ABS
4	o-ring	NBR
5	valve seal	EPDM
6	spring ring	fosphor bronze
7	union nut	brass (CW617N), chrome-plated
8	compression nut	brass (CW617N), chrome-plated
9	compression ring	brass (CW603N)

maximum pressure [bar]	
operating pressure	10

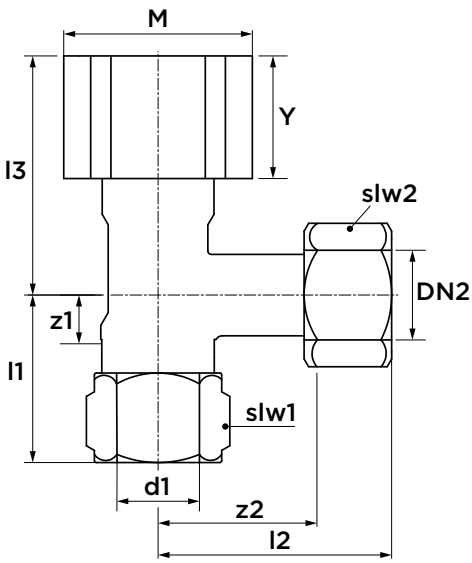

dimension	article no.	l1/l3	l2	z1	z2	M	Y	slw1/slw2
12 x G⅜" (DN10)	0492118	24	40	5	18	26	18	19
12 x G⅜" (DN10)	0492129	24	40	5	18	26	18	19

I2650 Boiler Inlet Combination Eurobic with flexible connection

(2 x compression x flexible hose connection)

specifications

- relieve pressure 8 bar
- maximum operating temperature 90°C
- VSH Super 15 mm compression connection
- rotatable funnel
- with check valve
- very high flow capacity 2780 l/h
- Kiwa and Belgaqua approval
- easy installation
- compact design
- with return connection for 15/22 mm or hose connection

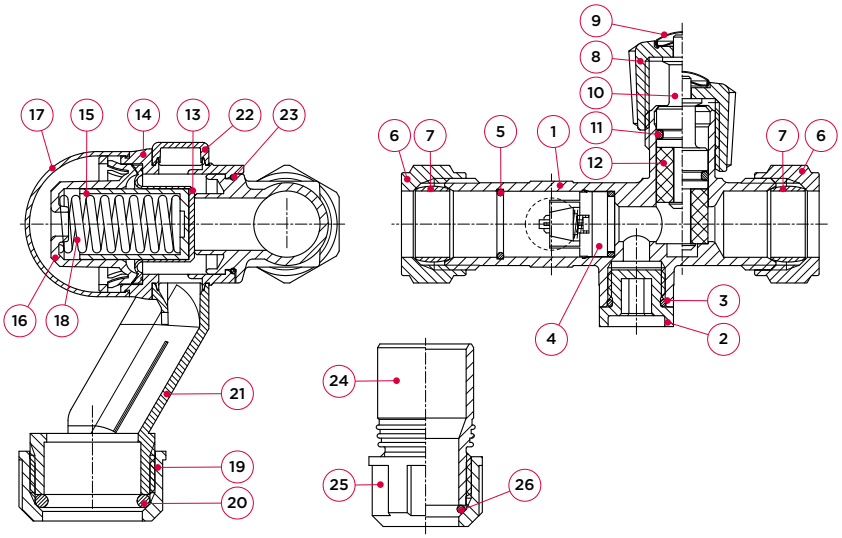

no.	component	material
1	body	brass (CW617N)
2	body plug	plastic (PA6, 25% GF)
3	body plug o-ring	EPDM
4	check valve o-ring	plastic, rubber (Neoperl NV15/DN10)
5	tube stop spring	stainless steel
6	compression end	brass (CW617N)
7	compression ring	brass (CW603N)
8	knob	plastic (PA6)
9	springclip with cap	stainless steel
10	stem	brass (CW617N)
11	stem o-ring	rubber (NBR)
12	cock	rubber (NBR)
13	membrane	rubber (EPDM)
14	discharge piece	plastic (POM)
15	spring holder	plastic (PA6, 25% GF)
16	spring housing	plastic (PA6, 30% GF)
17	cover	plastic (PP)
18	spring	stainless steel (1.4310)
19	funnel swivel nut	plastic (PP)
20	funnel nut o-ring	rubber (NBR)
21	funnel	plastic (PP)
22	funnel cover	plastic (PP)
23	safety valve o-ring	rubber (NBR)
24	reducing nipple	plastic (ABS)
25	swivel nut	plastic (PP)
26	reducing nipple o-ring	rubber (NBR)

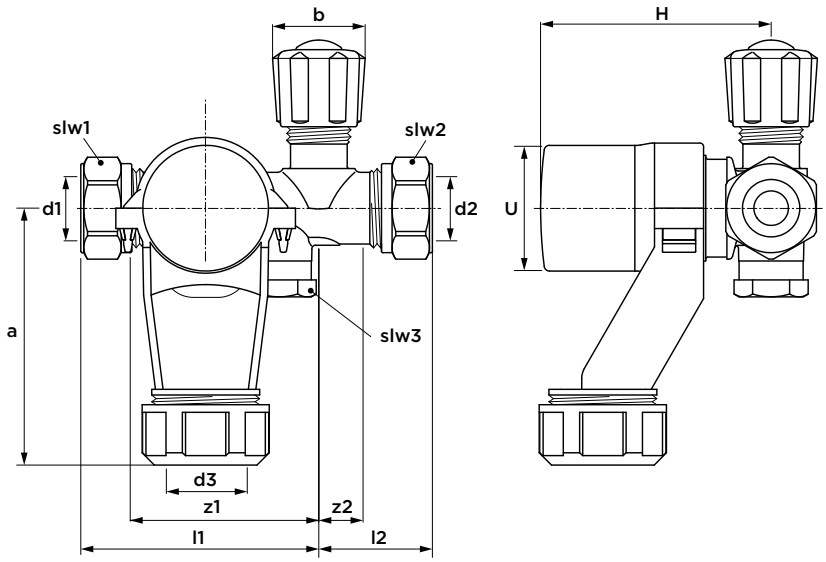

pressure equipment directive category	
alle dimensions	SEP

dimension	article no.	weight [kg]	l1	l2	z1	z2	slw1/ slw2	slw3	H	a	b	U
15 (DN15)	0312136	0.29	64	33	42	10	24	17	62	70	24	33

K1023 gas ball valve with union nut

(compression x male thread)

specifications

- maximum operating pressure 0.5 bar
- temperature range -20°C to 60°C
- VSH Super compression connection on one side suitable for stainless and copper tube
- Gastec QA and CE-marking according EN331:2015
- easy operation with open-close handle
- handle can be locked and reversed 180°

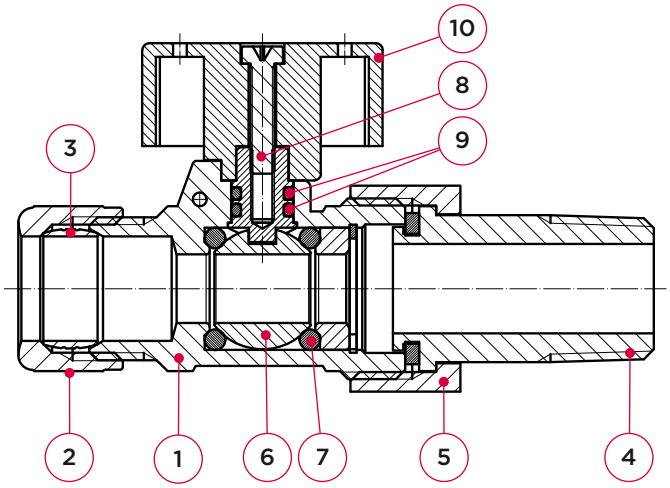

no.	component	material
1	body	brass (CW617N)
2	compression nut	brass (CW617N)
3	compression ring	brass (CW603N)
4	male thread connection	brass (CW617N)
5	union nut	brass (CW617N)
6	ball	brass (CW617N), chrome plated
7	ball seal	rubber (NBR)
8	stem	brass (CW617N)
9	stem o-ring	rubber (NBR)
10	handle	plastic (PA6, 25% GF)

pressure equipment directive category	
alle dimensions	SEP

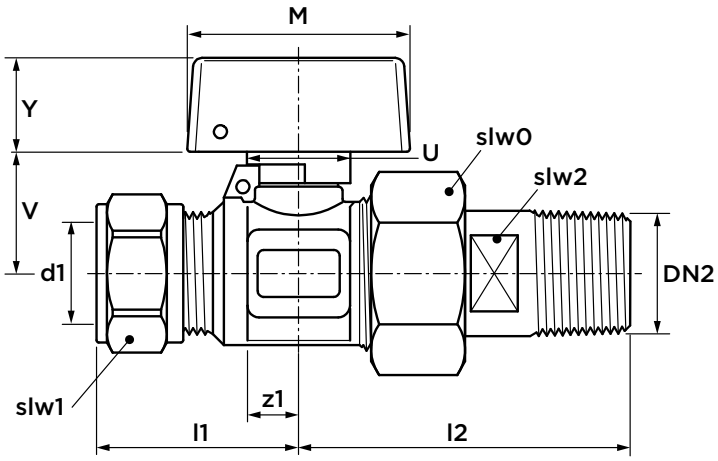

dimension	article no.	weight [kg]	Kv [m³/h]	l1	z1	l2	slw0	slw1	slw2	V	Y	M	U
15 x R½" (DN12)	0605110	0.2	> 4.3	36	14	56	30	24	17	19	15	36	19
22 x R½" (DN12)	0605132	0.2	> 4.3	36	12	56	30	32	17	19	15	36	19
22 x R¾" (DN20)	0605154	0.4	> 11.65	39	16	63	37	32	24	24	15	36	19

K1025 gas ball valve with union nut

(2 x compression)

specifications

- maximum operating pressure 0.5 bar
- temperature range -20°C to 60°C
- VSH Super compression connection suitable for stainless steel and copper tube
- Gastec QA and CE-marking according EN331:2015
- easy operation with open-close handle
- handle can be locked and reversed 180°

no.	component	material
1	body	brass (CW617N)
2	compression nut	brass (CW617N)
3	compression ring	brass (CW603N)
4	union nut	brass (CW617N)
5	ball	brass (CW617N), chrome plated
6	ball seal	rubber (NBR)
7	stem	brass (CW617N)
8	stem o-ring	rubber (NBR)
9	handle	plastic (PA6, 25% GF)

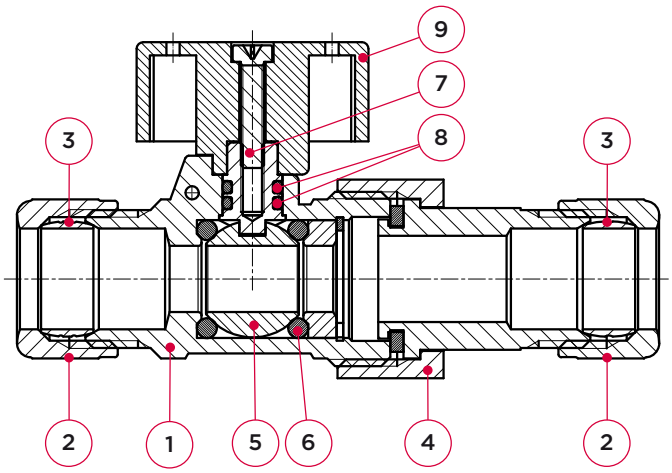

pressure equipment directive category	
alle dimensions	SEP

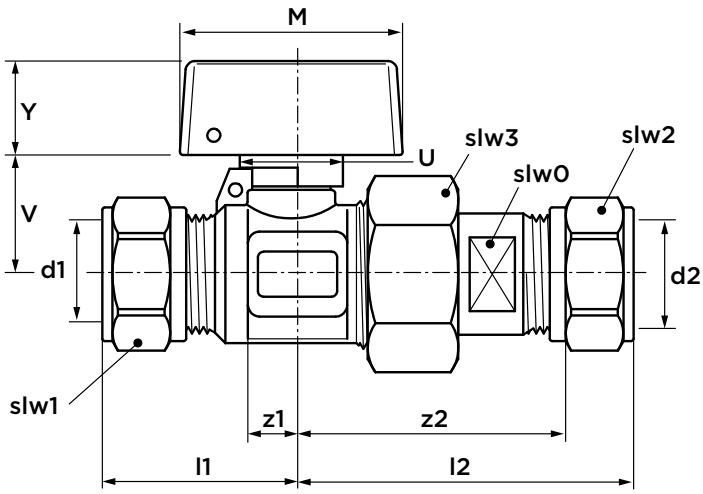

dimension	article no.	weight [kg]	Kv [m³/h]	l1	l2	z1	z2	slw0	slw1/slw2	slw3	V	Y	M	U
15 (DN12)	0604736	0.29	> 4.3	36	60	14	38	17	24	30	19	15	36	19
22 x 15 (DN12)	0604747	0.32	> 4.3	37	61	13	37	17	32	30	19	15	36	15
22 (DN20)	0604505	0.53	> 11.6	40	73	15	49	24	32	37	24	15	36	19

K1028 gas ball valve with union nut

(compression x female thread)

specifications

- maximum operating pressure 0.5 bar
- temperature range -20°C to 60°C
- Gastec QA and CE-marking according EN331:2015
- easy operation with open-close handle
- handle can be locked and reversed 180°
- VSH Super compression connection on one side for stainless and copper tube.

no.	component	material
1	body	brass (CW617N)
2	compression nut	brass (CW617N)
3	compression ring	brass (CW603N)
4	female thread connection	brass (CW617N)
5	union nut	brass (CW617N)
6	ball	brass (CW617N), chrome plated
7	ball seal	rubber (NBR)
8	stem	brass (CW617N)
9	stem o-ring	rubber (NBR)
10	handle	plastic (PA6, 25% GF)

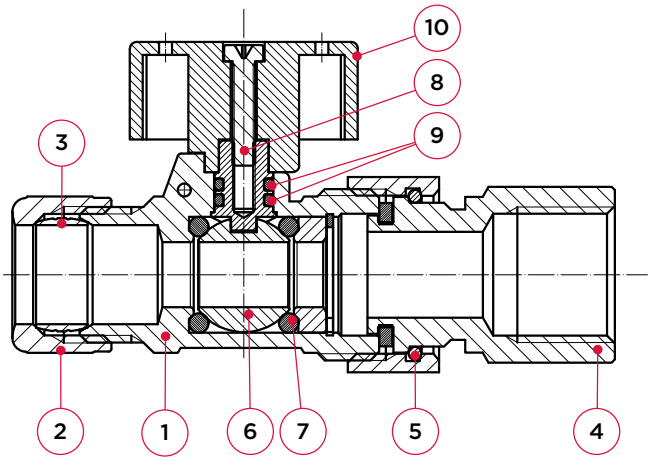

pressure equipment directive category	
alle dimensions	SEP

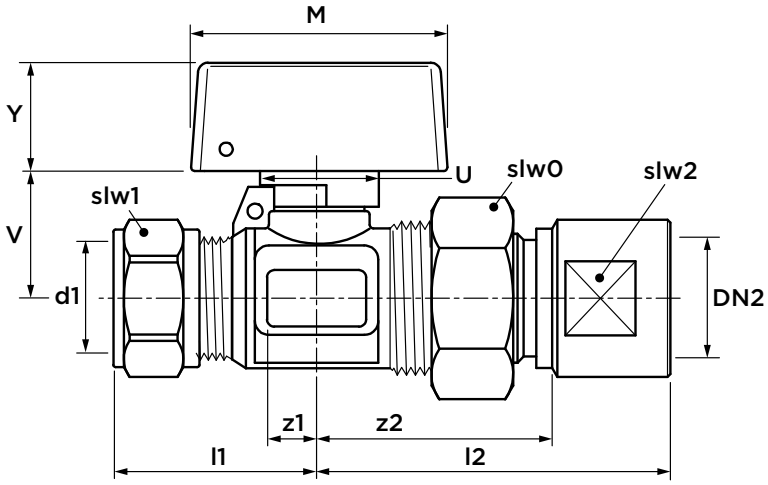

dimension	article no.	weight [kg]	Kv [m³/h]	l1	l2	z1	z2	slw0	slw1	slw2	V	Y	M	U
15 x Rp½" (DN12)	0605319	0.20	> 4.3	36	56	14	41	30	24	24	19	15	36	19
22 x Rp½" (DN20)	0605308	0.30	> 11.6	39	50	16	35	37	32	24	24	15	36	19

I2675 KAS 10 boiler connection kit

article no.	content
0318881	18 liter/1 bar expansion vessel, expansion vessel console, VSH safety valve 3 bar/VSH BIC boilet inlet combination 8 bar, filling hose, VSH gas ball valve, VSH Super straight connector FM 15 x R½", fill-drain valve, Simplex vent plug and a Simplex blind stop

I2675 KAS flex boiler connection kit

article no.	content
0319125	VSH gas ball valve 15 x R¾", Gastec flexible stainless steel gas tube yellow 45 cm, 15 x G¾", Kiwa stainless steel flexible tube 50 cm ø15 (2x), Kiwa flexible stainless steel tube 50 cm ø22 (2x)

disclaimer:
The technical data are non-binding and do not reflect the warranted characteristics of the products. They are subject to change. Please consult our General Terms and Conditions. Additional information is available upon request. It is the designer's responsibility to select products suitable for the intended purpose and to ensure that pressure ratings and performance data are not exceeded. The installation instructions should always be read and followed. The system must always be depressurized and drained before any components, whether defective or otherwise, are removed, modified or corrected.

aalberts integrated piping systems

more information?

For a complete and up-to-date product range and our additional services, visit: www.aalberts-ips.eu

Would you like to make an appointment to meet an account manager in your region or receive advice and support from one of our experts?
Please contact:

Aalberts integrated piping systems Customer Service
+31 (0)35 68 84 330
salessupport.emea@aalberts-ips.com

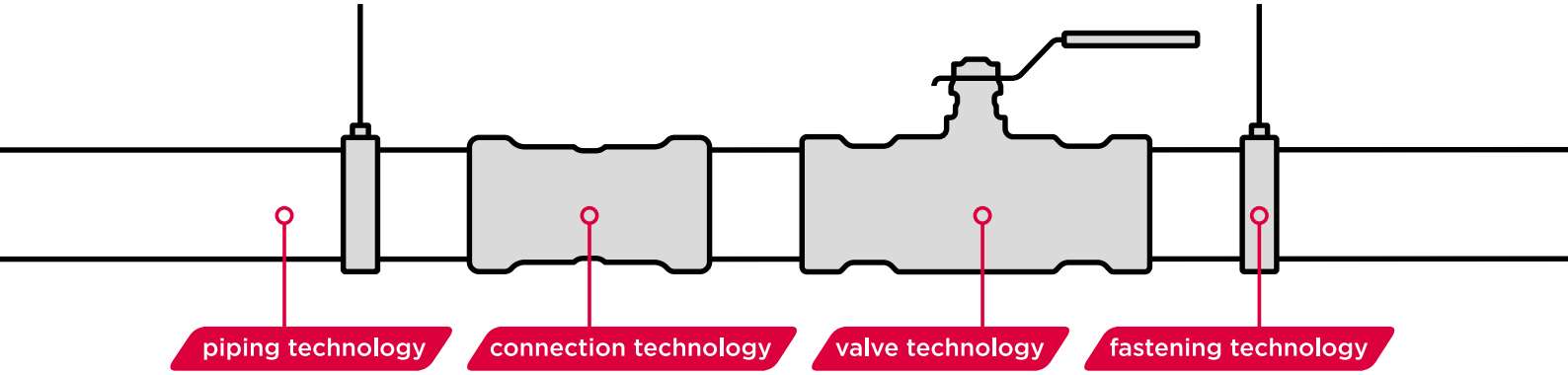

Aalberts integrated piping systems B.V.
Oude Amersfoortseweg 99 / 1212 AA Hilversum
P.O. Box 498 / 1200 AL Hilversum
The Netherlands
www.aalberts-ips.eu

5007904-2024-21 EN